Publication Number 29-435

QUAD RS 232C
LINE CONDITIONING MODULE (LCM)
INSTRUCTION MANUAL

CONSISTS OF:

QUAD RS 232C INSTALLATION SPEC	02-380A20
QUAD RS 232C MAINTENANCE SPEC	02-380A21
QUAD RS 232C INFORMATION SPEC	02-380A12
SCHEMATIC DRAWING	02-380D08
ASSEMBLY DRAWING	35-579D03

INFORMATION CONTAINED IN THIS MANUAL IS SUBJECT TO DESIGN CHANGE OR PRODUCT IMPROVEMENT

THIS MANUAL CONTAINS PROPRIETARY INFORMATION AND IS SUPPLIED BY INTERDATA FOR THE SOLE PURPOSE OF USING AND MAINTAINING INTERDATA SUPPLIED EQUIPMENT AND SHALL NOT BE USED FOR ANY OTHER PURPOSE UNLESS SPECIFICALLY AUTHORIZED IN WRITING.

INTERDATA®

Subsidiary of PERKIN-ELMER
Oceanport, New Jersey 07757, U.S.A.

© INTERDATA INC., 1975
All Rights Reserved
Printed in U.S.A.
May 1975

QUAD RS 232C
LINE CONDITIONING MODULE (LCM)
INSTALLATION SPECIFICATION

INTRODUCTION

This specification provides the necessary information for the installation of the 02-380 Quad RS232C Line Conditioning Module (LCM). The LCM assembly consists of one standard 35-579 half board and two 17-354F01 cables. The half board must be strapped to a blank half board (INTERDATA 16-398 Half Board Kit) or an active half board (i.e. Line Frequency Clock) to be installed in a chassis designed for full boards. The Quad RS232C LCM board may be used in either the right or left half position, as required. Refer to Figure 1.

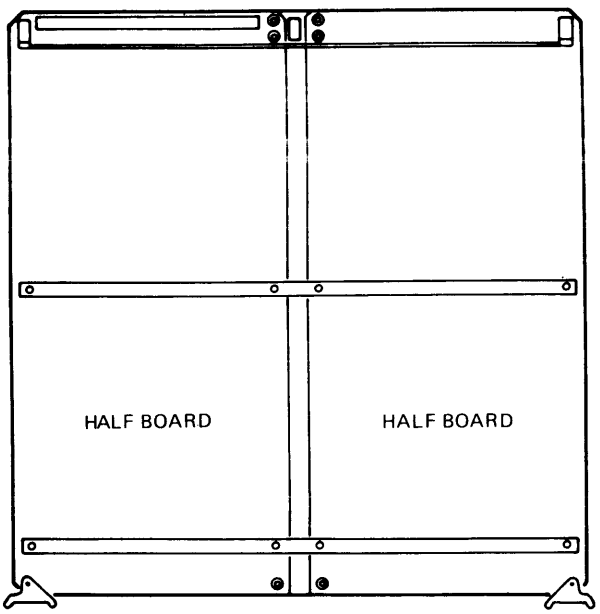

NOTE: 35-579 HALF BOARD CAN BE LOCATED ON EITHER SIDE.

Figure 1. Half Board Assembly

INSTALLATION

Unpacking Instructions

When the Quad RS232C LCM is shipped with a system, it is installed at the factory so there is no special unpacking procedure. It is only necessary to insure that the module is properly seated in its connectors. If the module assembly is purchased separately, it should be unpacked carefully and inspected for damage prior to installation.

This information is proprietary and is supplied by INTERDATA for the sole purpose of using and maintaining INTERDATA supplied equipment and shall not be used for any other purpose unless specifically authorized in writing.

Location

The 35-579 QUAD RS 232C LCM half board, strapped to a blank or active half board, may be installed in any I/O slot. However, it should be located within one or two slots of its associated INTERDATA Communication Adapter. After installing the module, do not remove the factory installed RACK0/TACK0 strap located on the back panel between Terminals 222 and 122 of the selected slot.

Cables and Connectors

The 17-354 and 17-355 cables are connected as shown in Figure 2. The configuration as shown has the ability to support two RS232C or CCITT V.24 type lines.

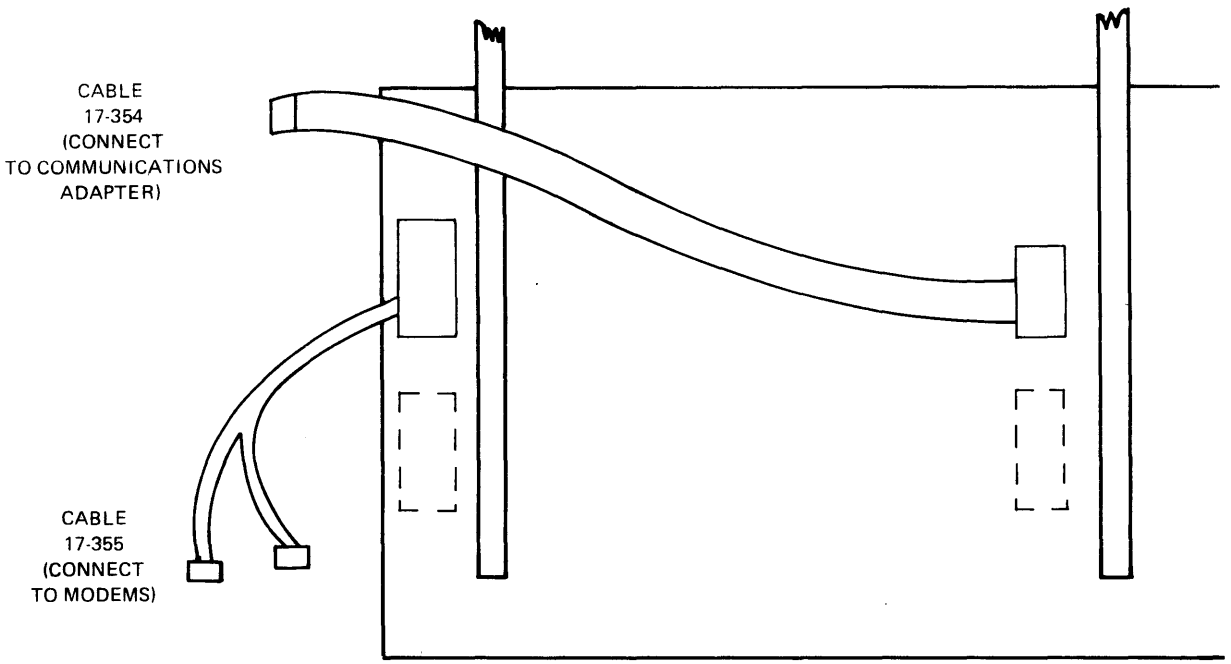

Figure 2A. Cable Connections (02-380A20)

NOTE

Cable 17-355 is not supplied with the LCM. It is a separately purchased item. Each 17-355 cable terminates two modems.

INSTALLATION CHECK

Proper operation of the QUAD RS 232C LCM card is verified at INTERDATA prior to shipment and no additional installation checks are necessary by the user.

This information is proprietary and is supplied by INTERDATA for the sole purpose of using and maintaining INTERDATA supplied equipment and shall not be used for any other purpose unless specifically authorized in writing.

QUAD RS 232C
LINE CONDITIONING MODULE (LCM)
MAINTENANCE SPECIFICATION

INTRODUCTION

The 02-380 Quad RS232C Line Conditioning Module (LCM) is a 7 inch printed circuit board used to convert TTL logic levels into RS232C or CCITT V.24 Logic levels.

DESCRIPTION

Refer to Figure 1 for the following description.

The Quad RS232C LCM card provides the ability to convert TTL Logic levels provided by an INTERDATA Communication Adapter into logic levels compatible with EIA RS232C and CCITT V.24 Specifications. The Quad RS232C LCM card provides the ability to terminate up to 4 modems or communication lines. All the interface signals that are defined by the EIA RS232C and CCITT V.24 specifications are not supported by the Quad RS232 LCM card. Various strap options on the Quad RS232C LCM card provide the ability to adequately terminate the majority of modems, either synchronous or asynchronous.

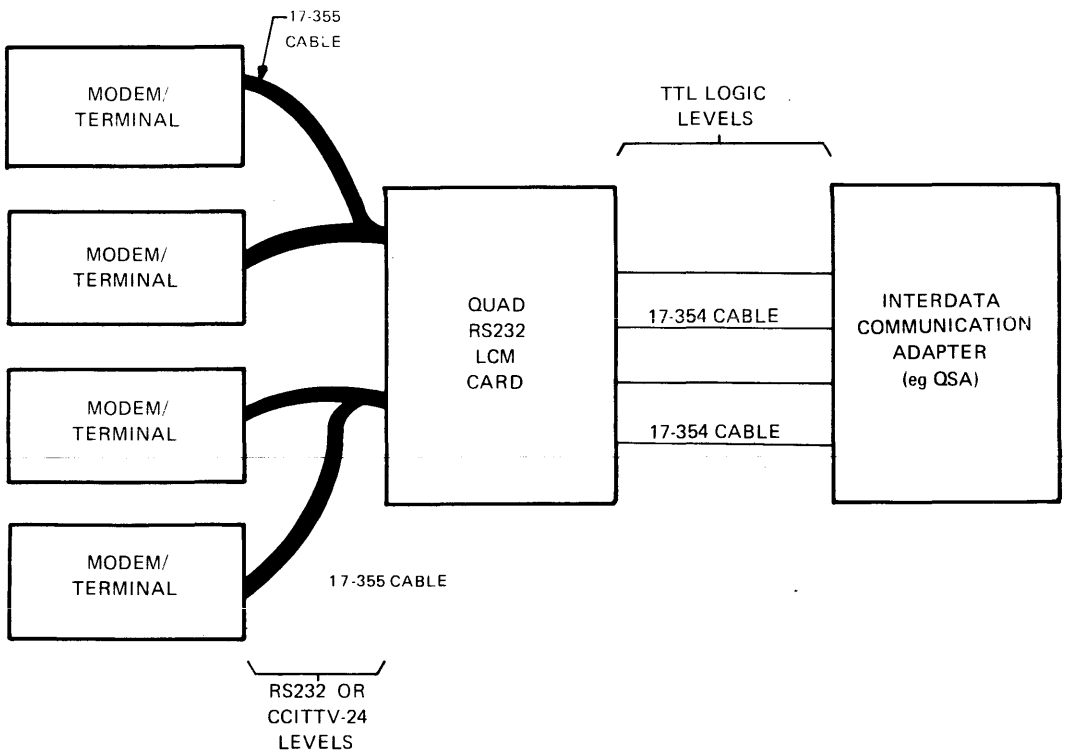

Figure 1. Typical Connection Diagram (02-380A21)

This information is proprietary and is supplied by INTERDATA for the sole purpose of using and maintaining INTERDATA supplied equipment and shall not be used for any other purpose unless specifically authorized in writing.

MNEMONICS

The following mnemonics list contains mnemonics that contain an X suffix; the X may represent one of the line designations, A, B, C or D.

AA-X	RS232C designation for protective ground or chassis ground.
AB-X	RS232C designation for signal ground or shield ground.
BA-X	RS232C designation for Transmitted Data. Transmitted Data is serial binary information sent from the INTERDATA Communication Adapter to the modem (RS232C level).
BB-X	RS232C designation for Received Data. Received Data is serial binary information received by the INTERDATA Communication Adapter from the modem (RS232C level).
CA-X	RS232C designation for Request To Send. Request To Send is a control line activated by the INTERDATA Communication Adapter indicating to the modem a request to transmit data (RS232C level).
CB-X	RS232C designation for Clear To Send. Clear To Send is a control line activated by the modem indicating to the INTERDATA Communication Adapter that the modem is prepared to transmit data from the INTERDATA Communication Adapter (RS232C level).
CC-X	RS232C designation for Data Set Ready. Data Set Ready is a control line from the modem to the INTERDATA Communication Adapter indicating that the modem is on line.
CD-X	RS232C designation for Data Terminal Ready. Data Terminal Ready is a control line from the INTERDATA Communication Adapter to the modem indicating that the Adapter is available (RS232C level).
CE-X	RS232C designation for Ring. Ring is a control line from the modem to the INTERDATA Communication Adapter indicating an attempt to establish a connection (RS232C level).
CF-X	RS232C designation for Received Line Signal Detector. Received Line Signal Detector, or as it is more commonly referred to, "Carrier Off", is a control line from the modem to the INTERDATA Communication Adapter indicating the lack of carrier (RS232C level).
CG-X	RS232C designation for Data Signal Quality Detector. Data Signal Quality Detector is a control line from the modem to the INTERDATA Communication Adapter indicating the probability of error in the data being received by the adapter (RS232C level).
CH-X	RS232C designation for Data Signaling Rate Selector. Data Signaling Rate Selector is a control line from the INTERDATA Communication Adapter to the modem indicating the desire to change the data transfer rate between stations (RS232C level).
CL2SX	Clear To Send; this is the TTL Logic level of CB-X that is sent to the INTERDATA Communication Adapter.
DB-X	RS232C designation for Transmitter Signal Element Timing. Transmitter Signal Element Timing, or as it is more commonly referred to "Transmit Clock", is a data timing signal from the modem to the INTERDATA Communication Adapter which is to clock data transmitted by the Adapter (RS232C level).
DD-X	RS232C designation for Received Signal Element Timing. Received Signal Element Timing, or as it is more commonly referred to, "Received Clock", is a data timing signal from the modem to the INTERDATA Communication Adapter which is used to strobe the data received by the Adapter (RS232C level).
DSRDYX	Data Set Ready; this is the TTL Logic level of CC-X that is sent to the INTERDATA Communication Adapter.
DTRX	Data Terminal Ready; this is the TTL Logic level of CD-X that is received from the INTERDATA Communication Adapter.
RCLKX	Received Clock; this is the TTL Logic level of DD-X that is sent to the INTERDATA Communication Adapter.
RDATAX	Received Data; this is the TTL Logic level of BB-X that is sent to the INTERDATA Communication Adapter.

This information is proprietary and is supplied by INTERDATA for the sole purpose of using and maintaining INTERDATA supplied equipment and shall not be used for any other purpose unless specifically authorized in writing.

RINGX	RING; this is the TTL Logic level of CE-X that is sent to the INTERDATA Communication Adapter.
RQ2SX	Request To Send; this is the TTL Logic level of CA-X that is received from the INTERDATA Communication Adapter.
RSPECX	Receive Special; this is the TTL Logic level of an optionally received RS232 signal that is sent to the INTERDATA Communication Adapter.
SBA-X	RS232C designation for Secondary Transmitted Data. Secondary Transmitted Data is serial binary information sent from the INTERDATA Communication Adapter to the modem (RS232C level).
TCLKX	Transmit Clock; this is the TTL Logic level of DB-X that is sent to the INTERDATA Communication Adapter.
TDATAX	Transmit Data; this is the TTL Logic level of BA-X that is received by the INTERDATA Communication Adapter.
TSPECX	Transmit Special; this is the TTL Logic level of an optional signal received from the INTERDATA Communication Adapter that may be converted into an RS232C level.
1SBB-X	RS232C designation for Secondary Received Data. Secondary Received Data is serial binary data sent from the modem to the INTERDATA Communication Adapter.
2SBB-X	Same as 1SBB-X with the exception that the pin designation at the modem connector is different.

This information is proprietary and is supplied by INTERDATA for the sole purpose of using and maintaining INTERDATA supplied equipment and shall not be used for any other purpose unless specifically authorized in writing.

02-380A12
May 1975

QUAD RS 232C
LINE CONDITIONING MODULE (LCM)
INFORMATION SPECIFICATION

INTRODUCTION

This specification covers aspects of the options available on the QUAD RS 232C Line Conditioning Module (LCM) card and the EIA RS 232C and CCITT V.24 specifications with regard to the RS 232C LCM card. All of the signals designated by the EIA RS 232C and CCITT V.24 specifications are not supported in the QUAD RS 232C LCM. The signals that are provided should be adequate to support the majority of modems manufactured. Some modems do not support all the signals that are provided and other modems may provide a unique signal that the user may wish to monitor, for these reasons a variety of strap options are provided on the QUAD RS 232C LCM board.

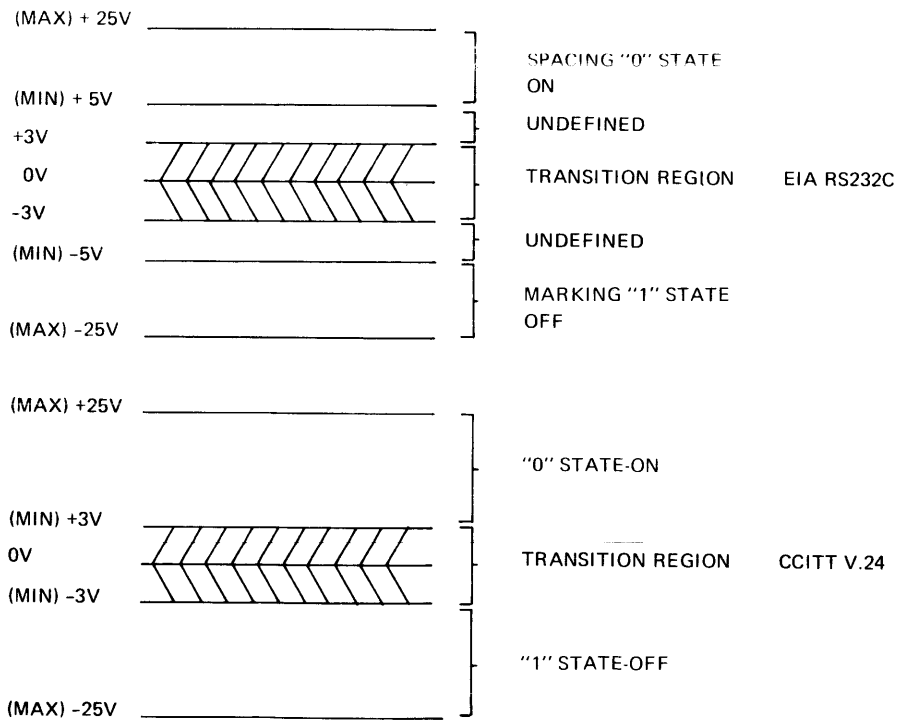

Figure 1. Logic Levels

This information is proprietary and is supplied by INTERDATA for the sole purpose of using and maintaining INTERDATA supplied equipment and shall not be used for any other purpose unless specifically authorized in writing

RS232C/CCITT V.24 Cross Reference of signals terminated in the Quad RS232C LCM

RS232C	CCITT V.24	NAME
AA	101	Protective Ground
AB	102	Signal Ground
BA	103	Transmitted Data
BB	104	Received Data
CA	105	Request To Send
CB	106	Ready For Sending - Clear To Send
CC	107	Data Set Ready
CD	108/2	Data Terminal Ready
CE	125	Calling Indicator (Ring Indicator)
CF	109	Data Channel Received Line Signal Detector
CG	110	Data Signal Quality Detector
CH	111	Data Signalling Rate Selector
DB	114	Transmitter Signal Element Timing
DD	115	Receiver Signal Element Timing
SBA	118	Transmitted Backward Channel Data (Secondary) Transmitted Data)
SBB	119	Received Backward Channel Data (Secondary Received Data)

This information is proprietary and is supplied by INTERDATA for the sole purpose of using and maintaining INTERDATA supplied equipment and shall not be used for any other purpose unless specifically authorized in writing.

QUAD RS232C LCM CARD OPTIONS

Data Set Ready (CC)

In the event that a modem does not supply CC (Data Set Ready), the Quad RS232C LCM card has a strap option on each of the four lines that will force Data Set Ready to the INTERDATA Communication Adapter to appear ACTIVE. To exercise these options perform the following:

Line "A"	Remove strap from	46 to 53,
Option	Add strap from	44 to 53
Line "B"	Remove strap from	37 to 43,
Option	Add strap from	38 to 43
Line "C"	Remove strap from	16 to 23,
Option	Add strap from	14 to 23
Line "D"	Remove strap from	7 to 13,
Option	Add strap from	8 to 13

Ring (CE)

In the event that a modem does not supply CE (Ring), the Quad RS232C LCM card has a strap option on each of the four lines that will force the Ring signal going to the INTERDATA Communication Adapter to appear INACTIVE. To exercise these options perform the following:

Line "A"	Remove strap from	47 to 54,
Option	Add strap from	XRPA to 54
Line "B"	Remove strap from	36 to 42,
Option	Add strap from	XRPA to 42
Line "C"	Remove strap from	17 to 24
Option	Add strap from	XRPB to 24
Line "D"	Remove strap from	6 to 12
Option	Add strap from	XRPB to 12

Clear To Send (CB)

In the event that a modem or terminal does not supply CB (Clear To Send), the Quad RS232C LCM card has a strap option on each of the four lines that will cause the Clear To Send signal to the INTERDATA Communication Adapter to appear ACTIVE. To exercise these options perform the following:

Line "A"	Remove strap from	51 to 56,
Option	Add strap from	50 to 56
Line "B"	Remove strap from	31 to 39,
Option	Add strap from	32 to 39
Line "C"	Remove strap from	21 to 26,
Option	Add strap from	20 to 26
Line "D"	Remove strap from	1 to 9,
Option	Add strap from	2 to 9

This information is proprietary and is supplied by INTERDATA for the sole purpose of using and maintaining INTERDATA supplied equipment and shall not be used for any other purpose unless specifically authorized in writing.

Carrier Off (CF)

In the event that a modem or terminal does not supply CF (Carrier Off), the Quad RS232C LCM card has a strap option on each of the four lines that will cause the Carrier Off signal to the INTERDATA Communication Adapter to appear ACTIVE. To exercise these options perform the following:

Line "A"	Remove strap from	48 to 55.
Option	Add strap from	49 to 55
Line "B"	Remove strap from	35 to 41.
Option	Add strap from	33 to 41
Line "C"	Remove strap from	18 to 25.
Option	Add strap from	19 to 25
Line "D"	Remove strap from	5 to 11.
Option	Add strap from	3 to 11

Receive Special

The Receive Special signal provides the ability to receive an optional signal from the modem. One of three optional signals may be strapped into the Receive Special RS232C receiver: 1SBB, 2SBB and CG. The 1SBB signal connects to pin 12 of the 25 pin modem connector. The 2SBB signal connects to pin 16 of the 25 pin modem connector. The CG signal connects to pin 21 of the 25 pin modem connector.

The Receive Special is normally strapped to indicate to the INTERDATA Communication Adapter that it is INACTIVE. In order to receive any of the optional signals the Receive Special line must be restrapped.

Line "A"	Remove strap from	XRPA to 52,
Option	Add strap from	45 to 52
Line "B"	Remove strap from	XRPA to 40
Option	Add strap from	34 to 40
Line "C"	Remove strap from	XRPB to 22
Option	Add strap from	15 to 22
Line "D"	Remove strap from	XRPB to 10
Option	Add strap from	4 to 10

NOTE

If any of the above options are exercised one of the following options MUST be selected to prevent spurious signal activity from being detected by the Receive Special RS232C receiver.

To receive the signal 1SBB on the Receive Special:

Line "A" Option	Add strap from	AE to AD
Line "B" Option	Add strap from	BE to BD
Line "C" Option	Add strap from	CE to CD
Line "D" Option	Add strap from	DE to DD

This information is proprietary and is supplied by INTERDATA for the sole purpose of using and maintaining INTERDATA supplied equipment and shall not be used for any other purpose unless specifically authorized in writing.

To receive the signal 2SBB on the Receive Special line:

Line "A" Option	Add strap from	AF to AD
Line "B" Option	Add strap from	BF to BD
Line "C" Option	Add strap from	CF to CD
Line "D" Option	Add strap from	DF to DD

To receive the signal CG on the Receiver Special line:

Line "A" Option	Add strap from	AG to AD
Line "B" Option	Add strap from	BG to BD
Line "C" Option	Add strap from	CG to CD
Line "D" Option	Add strap from	DG to DD

Transmit Special

The Transmit Special signal provides the ability to send an optional signal from the INTERDATA Communication Adapter to the modem. The Transmit Special is not normally connected to any wire going to the modem. The CH (Data Signaling Rate Selector) signal connects to pin 23 of the 25 pin modem connector. The SBA (Secondary Transmit Data) signal connects to pin 14 of the 25 pin modem connector.

To transmit a signal from the Transmit Special line to the CH option one or all of the following must be added:

Line "A" Option	Add strap from	AB to AA
Line "B" Option	Add strap from	BB to BA
Line "C" Option	Add strap from	CB to CA
Line "D" Option	Add strap from	DB to DA

This information is proprietary and is supplied by INTERDATA for the sole purpose of using and maintaining INTERDATA supplied equipment and shall not be used for any other purpose unless specifically authorized in writing.

To transmit a signal from the Transmit Special line to the SBA option one or all of the following must be added:

Line "A" Option	Add strap from	AC to AA
Line "B" Option	Add strap from	BC to BA
Line "C" Option	Add strap from	CC to CA
Line "D" Option	Add strap from	DC to DA

Ground Option

The Signal Ground line (AB) may be isolated from the protective or Chassis Ground (AA) by removing the following straps:

Line "A" Option	Remove strap from	AI to AH
Line "B" Option	Remove strap from	BI to BH
Line "C" Option	Remove strap from	CI to CH
Line "D" Option	Remove strap from	DI to DH

Removing any of the above straps will break the electrical connection of protective ground (AA) between the modem and the RS232C LCM card.

This information is proprietary and is supplied by INTERDATA for the sole purpose of using and maintaining INTERDATA supplied equipment and shall not be used for any other purpose unless specifically authorized in writing.

INTERDATA
2 Crescent Place, Oceanport, New Jersey 07757

REVISIONS

RELEASED FOR PRODUCTION	
ENG.	DATE 9/4/75

P/O 17-355

CONN 5		P2
100	1SBB-D	12
200	SBA-D	19
101	2SBB-D	16
201	DD-D	17
102	AA-D	01
202	DB-D	15
103	BB-D	03
203	CG-D	21
104	CB-D	05
204	BA-D	02
105	CF-D	08
205	CH-D	23
106	CE-D	22
206	CA-D	09
107	CC-D	06
207	CD-D	20
208	AB-D	07

P/O 17-355

CONN 5		P1
108	AB-C	07
109	CD-C	20
209	CC-C	06
110	CA-C	09
210	CE-C	22
111	CH-C	23
211	CF-C	08
112	BA-C	02
212	CB-C	05
113	CG-C	21
213	BB-C	03
114	DB-C	15
214	AA-C	01
115	DD-C	17
215	2SBB-C	16
116	SBA-C	19
216	1SBB-C	12

P/O 17-355

CONN 4		P2
100	1SBB-B	12
200	SBA-B	19
101	2SBB-B	16
201	DD-B	17
102	AA-B	01
202	DB-B	15
103	BB-B	03
203	CG-B	21
104	CB-B	05
204	BA-B	02
105	CF-B	08
205	CH-B	23
106	CE-B	22
206	CA-B	09
107	CC-B	06
207	CD-B	20
208	AB-B	07

P/O 17-355

CONN 4		P1
108	AB-A	07
109	CD-A	20
209	CC-A	06
110	CA-A	09
210	CE-A	22
111	CH-A	23
211	CF-A	08
112	BA-A	02
212	CB-A	05
113	CG-A	21
213	BB-A	03
114	DB-A	15
214	AA-A	07
115	DD-A	17
215	2SBB-A	16
116	SBA-A	19
216	1SBB-A	12

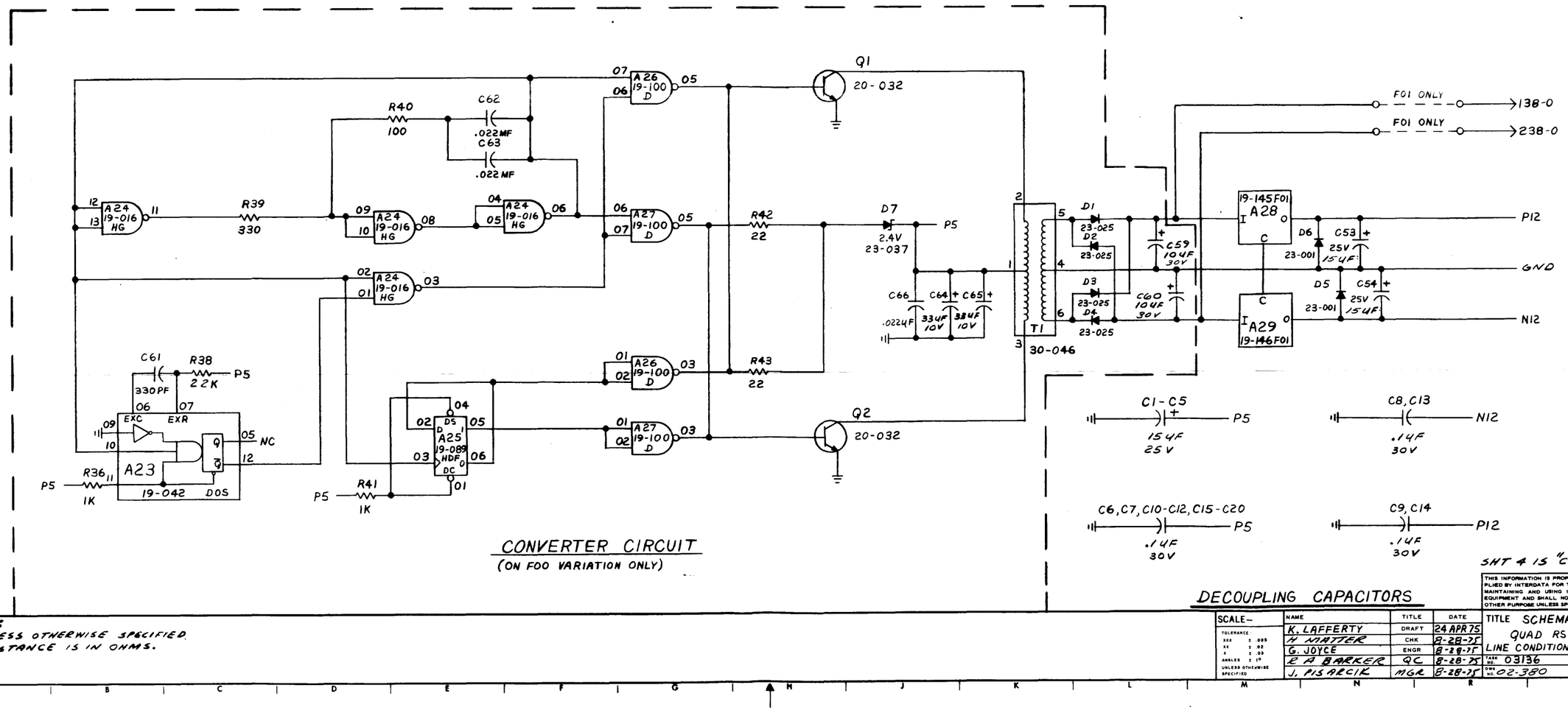

CONVERTER CIRCUIT
(ON F00 VARIATION ONLY)

C1 - C5 — P5 — 15µF 25V

C8, C13 — N12 — .1µF 30V

C6, C7, C10-C12, C15-C20 — P5 — .1µF 30V

C9, C14 — P12 — .1µF 30V

DECOUPLING CAPACITORS

SHT 4 IS "C" SIZE

NOTES:
1. UNLESS OTHERWISE SPECIFIED RESISTANCE IS IN OHMS.

THIS INFORMATION IS PROPRIETARY AND IS SUPPLIED BY INTERDATA FOR THE SOLE PURPOSE OF MAINTAINING AND USING INTERDATA SUPPLIED EQUIPMENT AND SHALL NOT BE USED FOR ANY OTHER PURPOSE UNLESS SPECIFICALLY INDICATED.

SCALE —	NAME	TITLE	DATE
TOLERANCE XXX ± .005 XX ± .02 X ± .09 ANGLES ± 1° UNLESS OTHERWISE SPECIFIED	K. LAFFERTY	DRAFT	24 APR 75
	H. NATTER	CHK	8-28-75
	G. JOYCE	ENGR	8-28-75
	R A BARKER	QC	8-28-75
	J. PISARCIK	MGR	8-28-75

TITLE SCHEMATIC
QUAD RS232 C
LINE CONDITIONING MODULE

TASK NO. 03136 — SHEET OF 1 — 4

DWG NO. 02-350 D08

BRUNING 44-231 24538

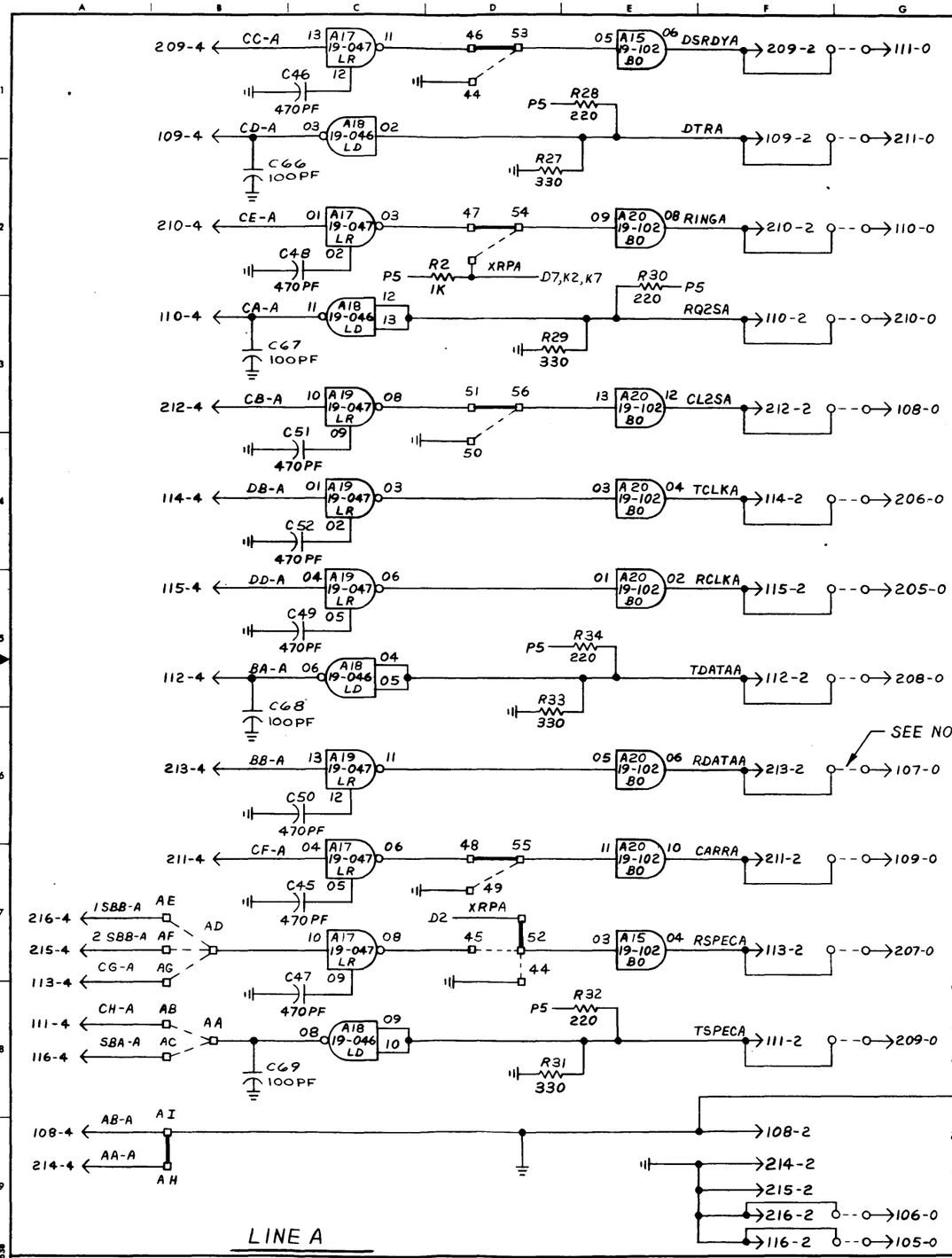

NOTES:
1. WIRE OPTIONS TO CONNECTOR O ARE EQUIPPED ON FOI VARIATION ONLY.

BRUNING 44-231 24538

INTERDATA
2 Crescent Place, Oceanport, New Jersey 07757

REVISIONS

THIS INFORMATION IS PROPRIETARY AND IS SUPPLIED BY INTERDATA FOR THE SOLE PURPOSE OF MAINTAINING AND USING INTERDATA SUPPLIED EQUIPMENT AND SHALL NOT BE USED FOR ANY OTHER PURPOSE UNLESS SPECIFICALLY INDICATED.

SCALE—
TOLERANCE
XXX ± .005
XX ± .02
X ± .03
ANGLES ± 1°
UNLESS OTHERWISE SPECIFIED

NAME	TITLE	DATE
	DRAFT	
	CHK	
	ENGR	

TITLE SCHEMATIC
QUAD RS232 C
LINE CONDITIONING MODULE

TASK NO. 03136
DWG NO. 02-380 D08
SHEET OF 2—4

INTERDATA
2 Crescent Place, Oceanport, New Jersey 07757

REVISIONS

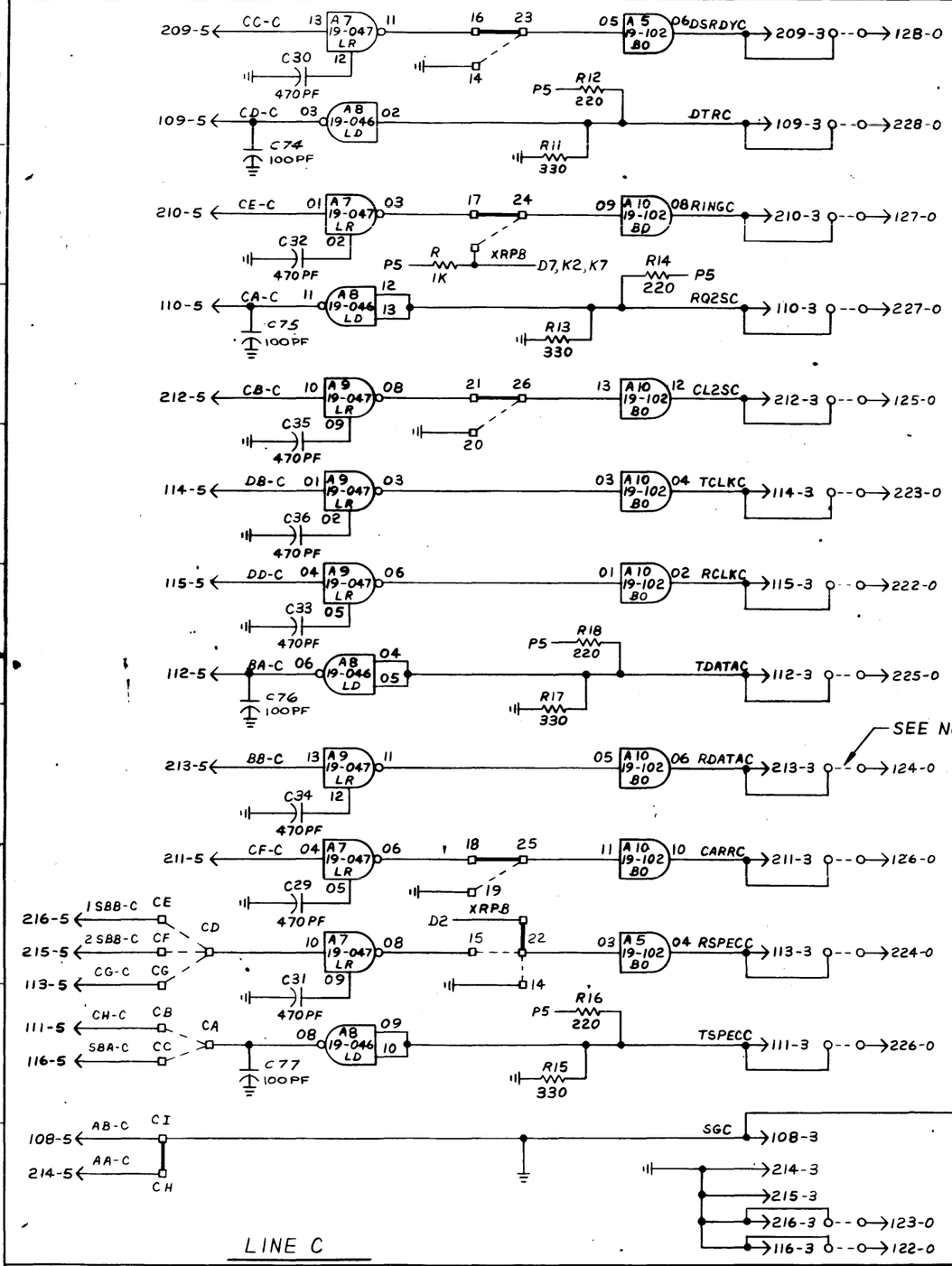

NOTES:
1. WIRE OPTIONS TO CONNECTOR 0 ARE EQUIPPED ON FOI VARIATION ONLY.

THIS INFORMATION IS PROPRIETARY AND IS SUPPLIED BY INTERDATA FOR THE SOLE PURPOSE OF MAINTAINING AND USING INTERDATA SUPPLIED EQUIPMENT AND SHALL NOT BE USED FOR ANY OTHER PURPOSE UNLESS SPECIFICALLY INDICATED

SCALE- | NAME | TITLE | DATE
DRAFT
CHK
ENGR

TITLE SCHEMATIC
QUAD RS232 C
LINE CONDITIONING MODULE

03136
02-380 D08

SHEET 3 OF 4

BRUNING 44 231 24538

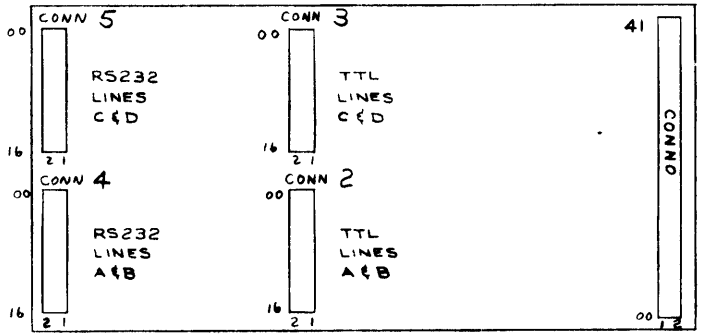

CONN 5

00	SBA-D	1SBB-D
01	DD-D	2SBB-D
02	DB-D	AA-D
03	CG-D	BB-D
04	BA-D	CB-D
05	CH-D	CF-D
06	CA-D	CE-D
07	CD-D	CC-D
08	AB-D	AB-C
09	CC-C	CD-C
10	CE-C	CA-C
11	CF-C	CH-C
12	CB-C	BA-C
13	BB-C	CG-C
14	AA-C	DB-C
15	2SBB-C	DD-C
16	1SBB-C	SBA-C
	2	1

CONN 3

00	GND	GND
01	RCLKD	GND
02	TCLKD	GND
03	RSPECD	RDATAD
04	TDATAD	CL2SD
05	TSPECD	CARRD
06	RQ2SD	RINGD
07	DTRD	DSRDYD
08	AB-D	AB-C
09	DSRDYC	DTRC
10	RINGC	RQ2SC
11	CARRC	TSPECC
12	CL2SC	TDATAC
13	RDATAC	RSPECC
14	GND	TCLKC
15	GND	RCLKC
16	GND	GND
	2	1

CONN 4

00	SBA-B	1SBB-B
01	DD-B	2SBB-B
02	DB-B	AA-B
03	CG-B	BB-B
04	BA-B	CB-B
05	CH-B	CF-B
06	CA-B	CE-B
07	CD-B	CC-B
08	AB-B	AB-A
09	CC-A	CD-A
10	CE-A	CA-A
11	CF-A	CH-A
12	CB-A	BA-A
13	BB-A	CG-A
14	AA-A	DB-A
15	2SBB-A	DD-A
16	1SBB-A	SBA-A
	2	1

CONN 2

00	GND	GND
01	RCLKB	GND
02	TCLKB	GND
03	RSPECB	RDATAB
04	TDATAB	CL2SB
05	TSPECB	CARRB
06	RQ2SB	RINGB
07	DTRB	DSRDYB
08	AB-B	AB-A
09	DSRDYA	DTRA
10	RINGA	RQ2SA
11	CARRA	TSPECA
12	CL2SA	TDATAA
13	RDATAA	RSPECA
14	GND	TCLKA
15	GND	RCLKA
16	GND	GND
	2	1

REVISIONS

SCALE—

TOLERANCE: .XX ± .005, .XX ± .02, .X ± .02, ANGLES ± 1°, UNLESS OTHERWISE SPECIFIED

NAME	TITLE	DATE
KL	DRAFT	20 MAY 75
	CHK	
	ENGR	

TITLE QUAD RS232 C CONNECTOR INFORMATION

TASK NO. 03136

DWG. NO. 02-380 C08

SHEET OF 4 — 4

THIS INFORMATION IS PROPRIETARY AND IS SUPPLIED BY INTERDATA FOR THE SOLE PURPOSE OF MAINTAINING AND USING INTERDATA SUPPLIED EQUIPMENT AND SHALL NOT BE USED FOR ANY OTHER PURPOSE UNLESS SPECIFICALLY INDICATED.

© D&W REPROGRAPHICS 346294-1

15.380 REF

7.230 REF

40 (4 PLACES)

EQUIP STRAPS 1 & 2 ON FOI ONLY

33 (172 PLACES)

3 (4 PLACES)

39 (20 PLACES)

1

BLOCK B

EQUIP ON FOO ONLY

BLOCK A

32

39 EQUIP ON FOI ONLY (60 PLACES)

SCALE 2:1

FOI	AS SHOWN - LESS BLOCK B
FOO	AS SHOWN - LESS BLOCK A

VARIATION TABLE

COMPONENT	REF DESIGNATION
INT CKT	A1, A2, A4 - A10, A12 - A20, A23 - A29
RESISTOR	R1 - R43
CAPACITOR	C1 - C78
DIODE	D1 - D7
TRANSISTOR	Q1, Q2
TRANSFORMER	T1

THIS INFORMATION IS PROPRIETARY AND IS SUPPLIED BY INTERDATA FOR THE SOLE PURPOSE OF MAINTAINING AND USING INTERDATA SUPPLIED EQUIPMENT AND SHALL NOT BE USED FOR ANY OTHER PURPOSE UNLESS SPECIFICALLY INDICATED.

RELEASED FOR PRODUCTION
MFG. ENG. [signature] DATE 9-4-75

NAME	TITLE	DATE
G. MELTON	DRFT	8-25-75
N. MATTER	CHK	8-25-75
G. JOYCE	ENG	8-28-75
R. A. BARKER	QC	8-28-75
V. PISARCIK	MGR	8-28-75

ASSEMBLY
QUAD RS232 C
LINE CONDITIONING MODULE
03136
35-579 D03
SHEET 1-1

PUBLICATION COMMENT FORM

Please use this postage-paid form to make any comments, suggestions, criticisms, etc. concerning this publication.

From _____ Date _____

Title _____ Publication Title _____

Company _____ Publication Number _____

Address _____

_____

_____

FOLD FOLD

Check the appropriate item.

☐ Error Page No. _____ Drawing No. _____

☐ Addition Page No. _____ Drawing No. _____

☐ Other Page No. _____ Drawing No. _____

Explanation:

FOLD FOLD

CUT ALONG LINE

Fold and Staple

No postage necessary if mailed in U.S.A.

STAPLE

STAPLE

FOLD

FOLD

FIRST CLASS
PERMIT No. 22
OCEANPORT, N. J.

BUSINESS REPLY MAIL

NO POSTAGE NECESSARY IF MAILED IN U.S.A.

POSTAGE WILL BE PAID BY:

INTERDATA®

Subsidiary of PERKIN-ELMER
Oceanport, New Jersey 07757, U.S.A.

TECH PUBLICATIONS DEPT. MS 53

FOLD

FOLD

STAPLE

STAPLE