HEWLETT hp PACKARD

2100A computer

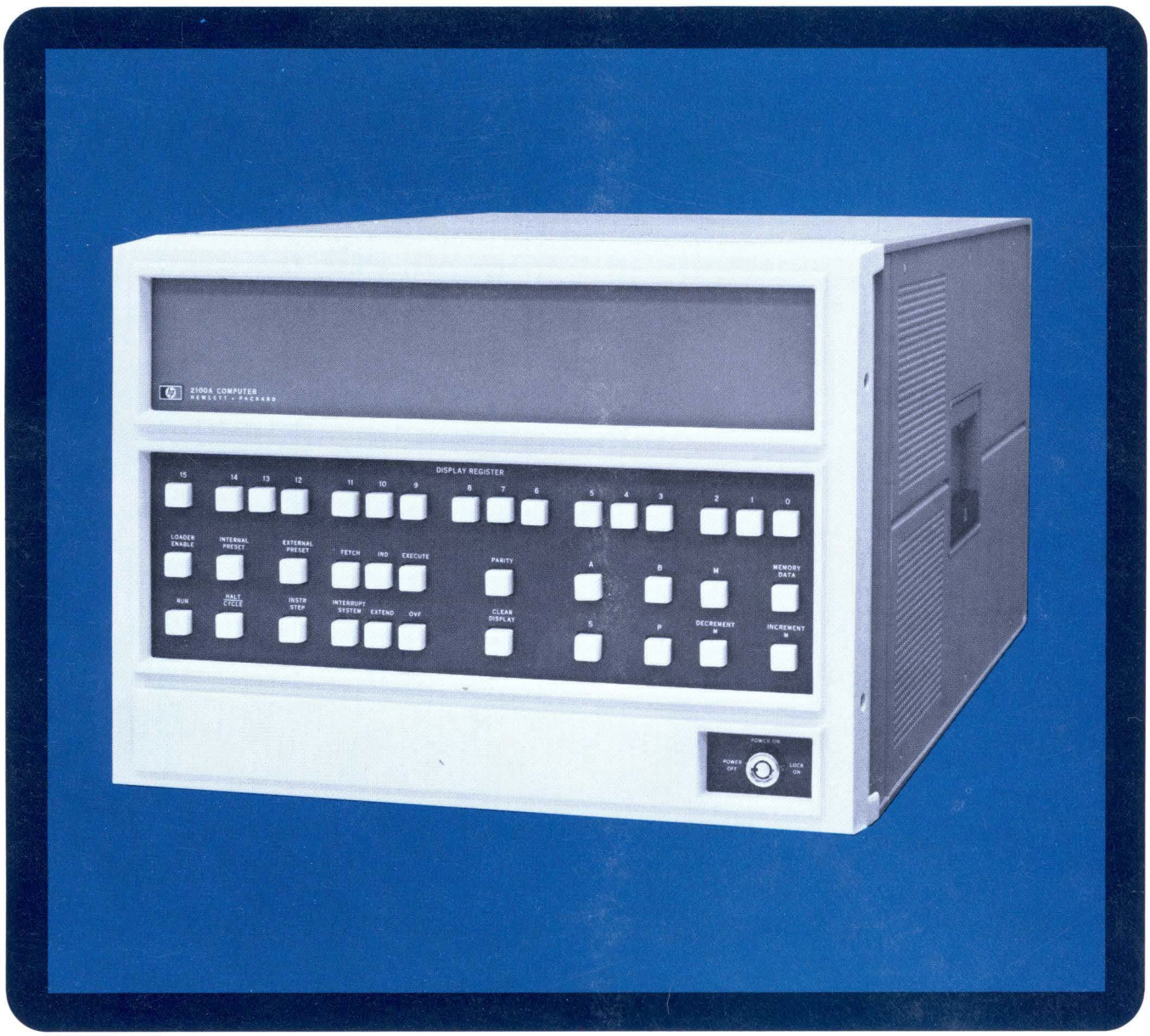

illustrated parts breakdown manual

HEWLETT hp PACKARD

ILLUSTRATED PARTS BREAKDOWN

MODEL 2100A COMPUTER

SERIAL NUMBERS COVERED

This manual applies directly to Model 2100A Computers having serial numbers prefixed 1136, 1140, 1145, 1146, 1147, 1148, 1150, 1202, 1203, 1215, 1224, 1230, 1238, 1243, 1244, 1249, 1250, 1304, 1306, 1312, 1314, 1320, 1322, and 1330. Computers with higher prefix numbers will be covered in manual updating supplements.

OPTIONS COVERED

This manual covers options 001, 004, 008, 012, 015, 016, 024, and 032 as well as the basic computer.

ACCESSORIES COVERED

This manual covers the following accessory kits:

12884A, 12884A-001 and 12884A-002 Memory (4K Increments) Accessory Kits

12885A, 12885A-001, 12885A-002, 12885A-003, and 12885A-004 Memory (8K Increments) Accessory Kits

12895A Direct Memory Access Accessory Kit

12899A Operator Panel Accessory Kit

12901A Floating-Point Hardware Accessory Kit

02100-90004

HEWLETT-PACKARD COMPANY
11000 WOLFE ROAD, CUPERTINO, CALIFORNIA, U.S.A

Printed: OCT 1973

TABLE OF CONTENTS

Section		Page
I	GENERAL INFORMATION	
1-1.	Introduction	1-1
1-4.	Scope	1-2
1-7.	Options	1-2
1-9.	Major Assembly Configurations	1-2
II	REPLACEABLE PARTS	
2-1.	Introduction	2-1
2-3.	Replaceable Parts Lists	2-1
2-5.	Index Numbered Lists	2-1
2-9.	Reference Designation Order Lists	2-1
2-12.	Exploded Views	2-1
2-14.	Parts Location Diagrams	2-2
2-16.	Ordering Information	2-2
III	NUMERICAL LISTS	
3-1.	Introduction	3-1

LIST OF ILLUSTRATIONS

Figure	Title	Page
1-1.	HP 2100A Computer	1-1
2-1.	HP 2100A Computer, Exploded View	2-5
2-2.	A1 Timing and Control Card, Parts Location Diagram	2-9
2-3.	A2 ROM Control Card, Parts Location Diagram	2-13
2-4.	A3 Microinstruction Decoder 1 Card, Parts Location Diagram	2-17
2-5.	A4 Microinstruction Decoder 2 Card, Parts Location Diagram	2-21
2-6.	A5 Arithmetic/Logic Card, Parts Location Diagram	2-25
2-7.	A6 Instruction Register Decoder Card, Parts Location Diagram	2-29
2-8.	A7 I/O Control Card, Parts Location Diagram	2-33
2-9.	A8 I/O Buffer Card, Parts Location Diagram	2-37
2-10.	A9 Direct Memory Access Card (Accessory), Parts Location Diagram	2-41
2-11.	A16 I/O Terminator Card, Parts Location Diagram	2-43
2-12.	A101, A104, A109, A112 X-Y Driver/Switch Card, Parts Location Diagram	2-47
2-13.	A102, A103 Core Stack/Sense Amplifier Card, (4K), Parts Location Diagram	2-51
2-14.	A102, A103, A110, A111 Core Stack/Sense Amplifier Card (8K), Parts Location Diagram	2-55
2-15.	A105 Inhibit Driver Card (8K), Parts Location Diagram	2-59
2-16.	A105, A108 Inhibit Driver Card (16K), Parts Location Diagram	2-63
2-17.	A106 Inhibit Driver Load Card, Parts Location Diagram	2-65
2-18.	A107 Data Control Card, Parts Location Diagram	2-69
2-19.	Operator Panel Assembly, Exploded View	2-70
2-20.	Controller Panel Assembly (Option 001), Exploded View	2-71
2-21.	Operator Panel Card, Parts Location Diagram	2-75
2-22.	Controller Panel Card (Option 001), Parts Location Diagram	2-77
2-23.	Plenum Chamber Assembly, Exploded View	2-79
2-24.	Power Switch Assembly, Exploded View	2-81
2-25.	Card Cage Assembly, Exploded View	2-83
2-26.	Plenum Chamber Side Bracket, Exploded View	2-85

LIST OF TABLES

Table	Title	Page
1-1.	Major Assembly Configurations	1-3
2-1.	HP 2100A Computer, Replaceable Parts	2-3
2-2.	A1 Timing and Control Card, Replaceable Parts	2-7
2-3.	A2 ROM Control Card, Replaceable Parts	2-10
2-4.	A3 Microinstruction Decoder 1 Card, Replaceable Parts	2-15
2-5.	A4 Microinstruction Decoder 2 Card, Replaceable Parts	2-19
2-6.	A5 Arithmetic/Logic Card, Replaceable Parts	2-23
2-7.	A6 Instruction Register Decoder Card, Replaceable Parts	2-27
2-8.	A7 I/O Control Card, Replaceable Parts	2-30
2-9.	A8 I/O Buffer Card, Replaceable Parts	2-34
2-10.	A9 Direct Memory Access Card (Accessory), Replaceable Parts	2-38
2-11.	A16 I/O Terminator Card, Replaceable Parts	2-42
2-12.	A101, A104, A109, A112 X-Y Driver/Switch Card, Replaceable Parts	2-45
2-13.	A102, A103 Core Stack/Sense Amplifier Card (4K), Replaceable Parts	2-48
2-14.	A102, A103, A110, A111 Core Stack/Sense Amplifier Card (8K), Replaceable Parts	2-52
2-15.	A105 Inhibit Driver Card (8K), Replaceable Parts	2-57
2-16.	A105, A108 Inhibit Driver Card (16K), Replaceable Parts	2-61
2-17.	A106 Inhibit Driver Load Card, Replaceable Parts	2-64
2-18.	A107 Data Control Card, Replaceable Parts	2-66
2-19.	Operator Panel Assembly, Replaceable Parts	2-70
2-20.	Controller Panel Assembly (Option 001), Replaceable Parts	2-71
2-21.	A24 Operator Panel Card, Replaceable Parts	2-72
2-22.	A24 Controller Panel Card (Option 001), Replaceable Parts	2-76
2-23.	Plenum Chamber Assembly, Replaceable Parts	2-78
2-24.	Power Switch Assembly, Replaceable Parts	2-80
2-25.	Card Cage Assembly, Replaceable Parts	2-81
2-26.	Plenum Chamber Side Bracket, Replaceable Parts	2-84
3-1.	Numerical Listing of Electrical Parts	3-1
3-2.	Numerical Listing of Mechanical Parts	3-22
3-3.	Reference Designations and Abbreviations	3-24
3-4.	Code List of Manufacturers	3-25

GENERAL INFORMATION

SECTION I

1-1. INTRODUCTION.

1-2. This Illustrated Parts Breakdown (IPB) Manual, part no. 02100-90004, is one in a set of five manuals that document the Hewlett-Packard 2100A Computer (figure 1-1). The other manuals in the series are: the power supply Operating and Service Manual, part no. 5951-3038, the Reference Manual, part no. 02100-90001, the Installation and Maintenance Manual, part no. 02100-90002, and the Diagrams Manual, part no. 02100-90003. The computer is documented in the five manuals as follows:

a. This IPB manual contains replaceable parts ordering information, replaceable parts lists, exploded views, part location diagrams, and numerical lists of parts for all assemblies of the computer except the power supply.

b. The power supply manual contains all the information necessary to troubleshoot and repair the power supply. This includes installation instructions, schematic diagrams, and replaceable parts information.

c. The Reference Manual contains specifications, operating instructions, and programming information for the computer.

d. The Installation and Maintenance Manual contains instructions for installation, maintenance, troubleshooting, and repair of the computer, except as covered in the power supply manual.

e. The Diagrams Manual provides interconnecting information and schematic diagrams for all assemblies of the computer except the power supply.

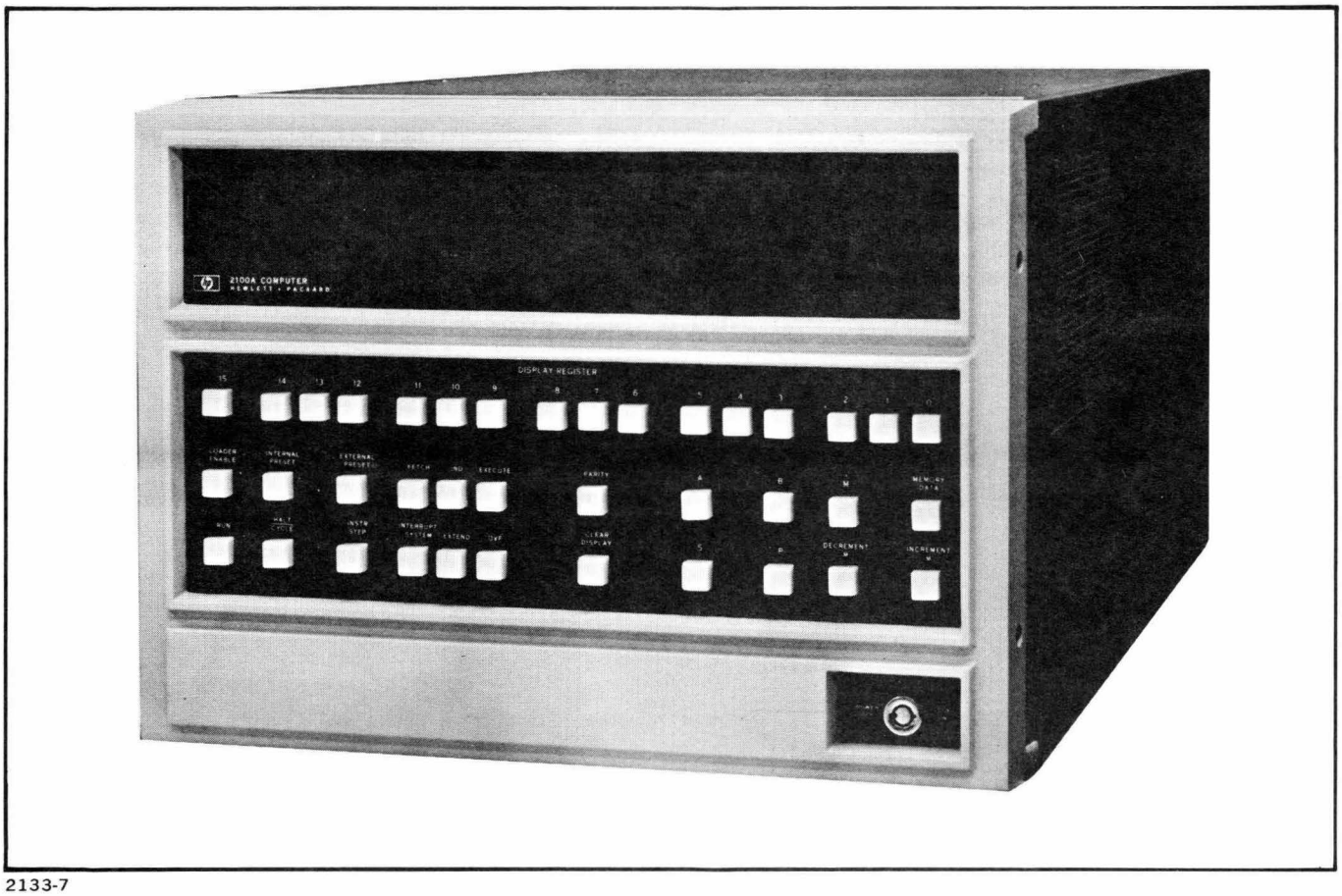

2133-7

Figure 1-1. HP 2100A Computer

1-3. Unless otherwise stated in future updating supplements, information contained in this manual is applicable to 2100A Computers having serial numbers with the prefixes listed on the title page of this manual.

1-4. SCOPE.

1-5. This manual is intended for use by maintenance personnel who are familiar with the maintenance procedures of the 2100A. A thorough understanding of the information presented in the Installation and Maintenance Manual for the computer is essential to using the material presented in this manual.

1-6. Sections II and III of this manual contain the following information:

a. Section II, Replaceable Parts. Section II describes the replaceable major assemblies, assemblies, and detailed parts for the 2100A Computer, including all options and accessories. Power Supply, I/O interface card, and I/O device replaceable parts are listed in their respective operating and service manuals. Exploded or parts location views are located adjacent to the corresponding replaceable parts lists. Where disassembly is significant, replaceable parts are listed and indexed in the order of disassembly.

b. Section III, Numerical Lists. Section III lists all replaceable parts for all the assemblies in the computer except the power supply. The parts are segregated into electrical and mechanical usage categories and are listed accordingly. Each of the two tables lists the replaceable part numbers in numerical sequence.

c. Updating Supplements. If required, updating supplements are included with this manual. These supplements make the manual applicable to computers with serial numbers prefixed higher than those listed on the title page of this manual.

1-7. OPTIONS.

1-8. This manual covers options to the basic 2100A Computer as follows:

a. Option 001. The controller panel replaces the standard operator panel.

b. Option 004. Adds 4K of memory to the basic computer.

c. Option 008. Adds 8K of memory to the basic computer.

d. Option 012. Adds 12K of memory to the basic computer.

e. Option 015. Provides for operation on 230-volt 50 hertz input power.

f. Option 016. Adds 16K of memory to the basic computer.

g. Option 024. Adds 24K of memory to the basic computer.

h. Option 032. Adds 32K of memory to the basic computer.

1-9. MAJOR ASSEMBLY CONFIGURATIONS.

1-10. Table 1-1 lists the revision codes of the major assemblies used in the computer. The revision codes reflect the configuration as originally manufactured and shipped from the factory. Because of field modifications, repairs, board exchange, and other factors that may alter the shipped configurations, the configurations existing in the field may not always agree with the information presented in table 1-1.

Table 1-1. Major Assembly Configurations

COMPUTER SERIAL NUMBER PREFIX	A1 02100-60014	A2 02100-60002	A3 02100-60004	A4 02100-60022	A4 –	A5 02100-60001	A6 02100-60003	A7 02100-60024	A8 02100-60007	A9 12895-60001	A16 02100-60060	A24 02100-60015	A24 02100-60017	A101 A104 A109 A112 02100-60012	A102 A103 4K CARD 02100-60040	A102 A103 A110 A111 8K CARD 5060-8324	A102 A103 A110 A111 8K CARD 5060-8331	A105 4K,8K MEMORY 02100-60008	A105 A108 02100-60009	A106 02100-60010	A107 02100-60011	A25 POWER SUPPLY 02100-60053
1136	1116	1106 or 1132	1124	1110	–	1051	1109	1116	1051	1116	1131	1123	1128	1121	1139	1126	–	1049	1049	1046	1132	1126 or 1140
1140	1116	1132	1124	1110	–	1051	1109	1116	1051	1116	1131	1123	1128	1121 or 1132	1139	1126 or 1136	–	1049	1049	1046	1132	1141
1145	1116	1132	1124	1110	–	1051	1109	1116	1051	1116	1131	1123	1128	1121 or 1132	1139	1126 or 1136	–	1049	1049	1046	1132	1141
1146	1116	1132 or 1144	1124	1110	–	1051	1109	1116	1051	1116	1131	1123	1128	1121 or 1132	1139	1126 or 1136	–	1049	1049	1046	1132	1146
1147	1116	1132 or 1144	1124	1110	–	1051	1109	1116	1051	1116	1131	1123	1128	1132	1139	1136	–	1049	1049	1046	1132	1146
1148	1116	1144	1124	1140	–	1051	1140	1144	1051	1116	1131	1123	1128	1132	1139	1136	–	1049	1049	1046	1132	1148 or 1149
1150	1116	1144	1124	1140	–	1051	1140	1144	1051	1116 or 1144	1131	1123	1128 or 1201	1132	1139	1136	–	1049	1049	1046	1132	1150
1202	1116	1144	1124	1140	–	1051	1202	1144	1051	1144	1131	1123	1201	1132 or 1152	1139	1136	–	1049	1049	1046	1132	1150
1203	1116	1144	1124 or 1144	1140	–	1051	1202	1144	1051	1144	1131	1123	1201	1152	1139	1136	1208	1049	1049	1046	1132	1150
1215	1116	1144	1144	1140	–	1051	1202	1215	1051	1144	1131	1123	1201	1152	1139	1136	1208	1049	1049	1046	1132	1215
1224	1116 or 1144	1144	1144	1140	–	1051	1202	1215	1051 or 1216	1144	1131	1123	1201	1152	1139 or 1148	–	1208	1049	1049	1046	1132	1220
1230	1144	1144	1144	1140	–	1051	1238	1215	1216	1144	1131	1123	1201	1152	1148	–	1208	1049	1049	1046	1132	1220
1238	1144	1144	1144	1140	–	1051	1238	1215	1216	1144	1131	1123	1201	1152	1148	–	1208	1049	1049	1046	1132	1229
1243	1144	1144	1144	1140	–	1051	1238	1215	1216	1144	1131	1123	1201	1152	1148	–	1208	1049	1049	1046	1132	1243
1244	1144	1144	1144	1140	–	1051	1238	1215	1216	1144	1131	1244	1201	1152	1148	–	1208	1049	1049	1046	1132	1243
1249	1144	1144	1144	1140	–	1051	1238	1215	1216	1144	1131	1244	1201	1152	1148	–	1208	1049	1049	1046	1132	1249
1250	1144	1144	1144	1140	–	1051	1238	1215	1216	1144	1131	1244	1201	1152	1148	–	1208	1049	1049	1046	1132	1250
1304	1144	1144	1144	1144	–	1051	1238	1215	1216	1144	1131	1244	1201	1152	1148	–	1208	1049	1049	1046	1132	1250
1306	1144	1144	1144	1144	–	1051	1238	1215	1216	1144	1131	1244	1201	1152	1148	–	1301	1049	1049	1046	1132	1250
1312	1144	1144	1144	1144	–	1051	1238	1215	1216	1144	1131	1244	1201	1152	1148	–	1301	1049	1049	1046	1312	1250
1314	1144	1144	1144	1144	–	1051	1238	1215	1216	1144	1131	1244	1201	1152	1148	–	1301	1049	1049	1046	1312	1314
1320	1144	1144	1144	1144	–	1051	1238	1215	1216	1144	1131	1244	1201	1152	1148	–	1301	1049	1049	1046	1312	1320
1322	1144	1144	1144	1144	–	1051	1238	1215	1216	1144	1131	1244	1201	1152	1148	–	1301	1049	1049	1046	1312	1322
1330	1144	1144	1144	1144	–	1051	1238	1215	1216	1144	1131	1244	1201	1152	1148	–	1301	1049	1049	1046	1312	1330

NOTE: A separate Operating and Service Manual, part number 5951-3038, is supplied for the A25 Power Supply Assembly.

2191-1C

REPLACEABLE PARTS

SECTION II

2-1. INTRODUCTION.

2-2. This section contains information that enables the user to interpret the replaceable parts lists in this section, and information to order replaceable parts for the computer. To order parts for the power supply, refer to its Operating and Service Manual, part no. 5951-3038.

2-3. REPLACEABLE PARTS LISTS.

2-4. Replaceable parts lists in this section are in two formats; lists by order of index number and lists by order of reference designation.

2-5. INDEX NUMBERED LISTS.

2-6. The index numbered lists (tables 2-1, 2-19, 2-20, and 2-33 through 2-36) are used in conjunction with the exploded views of the assemblies and subassemblies of the computer. The replaceable parts are referenced to the exploded views by index numbers which are in the order of disassembly except for attaching parts which are indexed immediately after the parts they attach.

2-7. Items in the DESCRIPTION column of the replaceable parts lists are indented to indicate item relationship. In addition, the symbol "— — — x — — —" follows the last of one or more attaching parts. Indention is as follows:

MAJOR ASSEMBLY
* Subassembly
* Attaching Parts for Subassembly
** Subassembly Parts
** Attaching Parts for Subassembly Parts

2-8. The columns in the index numbered lists provide the following information for each part:

a. FIG. & INDEX NO. The figure and index number where the replaceable parts are shown in an exploded view.

b. HP PART NO. The HP part number for each replaceable part.

c. DESCRIPTION. The description of each replaceable part and its applicable reference designation. Also lists special applications (accessories and options) of the replaceable part. Refer to table 3-3 for an explanation of abbreviations used in the DESCRIPTION column.

d. MFR CODE. A five digit code that denotes a typical manufacturer of the part. Refer to table 3-4 for a list of manufacturers.

e. MFR PART NO. The manufacturer's part number for each replaceable part.

f. UNITS PER ASSY. The total quantity of each part used in the assembly or subassembly to which it belongs.

2-9. REFERENCE DESIGNATION ORDER LISTS.

2-10. The lists which are in reference designation order (tables 2-2 through 2-18, 2-21, and 2-22) are used in conjunction with the parts location diagrams for the printed-circuit cards. The replaceable parts are referenced to the parts location diagrams by reference designations which correspond to the printed-circuit card schematic diagrams provided in the 2100A Diagrams Manual, part number 02100-90003.

2-11. The columns in the reference designation order lists provide the following information for each part:

a. REFERENCE DESIGNATION. The assembly designation and complete reference designation for each replaceable part.

b. HP PART NUMBER. The HP part number for each replaceable part.

c. QTY. The total quantity of a part used on the printed-circuit card is listed with the first entry for that part number.

d. DESCRIPTION. The description of each replaceable part. Refer to table 3-3 for an explanation of abbreviations used in the DESCRIPTION column.

e. MFR CODE. A five digit code that denotes a typical manufacturer of a part. Refer to table 3-4 for a list of manufacturers.

f. MFR PART NUMBER. The manufacturer's part number for each replaceable part.

2-12. EXPLODED VIEWS.

2-13. The exploded views, which are indexed in disassembly sequence except for attaching parts, correspond to replaceable parts lists in this section. The exploded views begin with figure 2-1 and show major assemblies and parts exploded away from the computer card cage assembly. This gives a representation of all the major assemblies and parts required to assemble the computer. Subsequent exploded views (figures 2-19, 2-20, and 2-23 through 2-26) are used to show the breakdown of the major

assemblies and are accompanied by corresponding replaceable parts lists.

2-14. PARTS LOCATION DIAGRAMS.

2-15. The parts location diagrams (figures 2-2 through 2-18, 2-21, and 2-22) are used to show the locations of components on the printed-circuit cards. The diagrams correspond to a reference designation order of replaceable parts lists located adjacent to the parts location diagrams. Reference designations provide correlation between the parts location diagrams and replaceable parts lists. The parts location diagrams are identical to the ones shown in the Diagrams Manual, part number 02100-90003. In that manual, the schematic diagram, parts location diagram, and replaceable parts list for each printed-circuit card are grouped together.

2-16. ORDERING INFORMATION.

2-17. To order replaceable parts for the computer, or an option or accessory, address the order to the local Hewlett-Packard Sales and Service Office listed at the end of this manual. (For power supply, I/O interface card, or I/O device ordering information, refer to their respective operating and service manuals.) The following information should be included in the order for each replaceable part.

a. Complete computer model number (including options and accessories) and serial number.

b. Hewlett-Packard part number for each part.

c. Complete description for each part as provided in the replaceable parts lists.

d. Circuit reference designation, if applicable, as shown in the replaceable parts lists.

Table 2-1. HP 2100A Computer, Replaceable Parts

FIG & INDEX NO.	HP PART NO.	DESCRIPTION	MFR CODE	MFR PART NO.	UNITS PER ASSY
2-1-	2100A	COMPUTER	28480	2100A	1
1	02100-00110	* Cover, Access, top (Attaching Parts)	28480	02100-00110	1
2	2360-0200	* Screw, Machine, flh, No. 6-32, 1/2 in. ---x---	00000	OBD	4
3	02100-60052	* Connector Assembly	28480	02100-60052	†
4	02100-60054	* Connector Assembly	28480	02100-60054	††
5	02100-60018	* Cable Assembly, A105 to A106 to A108, and A105 to A107 to A108 (24K and 32K Memory only)	28480	02100-60018	2
	02100-60028	* Cable Assembly, A105 to A106 (4K thru 16K Memory only) (Not shown in figure 2-1)	28480	02100-60028	1
	02100-60029	* Cable Assembly, A105 to A107 (4K thru 16K Memory only) (Not shown in figure 2-1)	28480	02100-60029	1
6	02100-00015	* Retainer, Printed-Circuit Card	28480	02100-00015	1
7	02100-60014	* Timing and Control Card (A1) (see figure 2-2)	28480	02100-60014	1
8	02100-60002	* ROM Control Card (A2) (see figure 2-3)	28480	02100-60002	1
9	02100-60004	* Microinstruction Decoder 1 Card (A3) (see figure 2-4)	28480	02100-60004	1
10	02100-60022	* Microinstruction Decoder 2 Card (A4) (see figure 2-5)	28480	02100-60022	1
11	02100-60001	* Arithmetic/Logic Card (A5) (see figure 2-6)	28480	02100-60001	1
12	02100-60003	* Instruction Register Decoder Card (A6) (see figure 2-7)	28480	02100-60003	1
13	02100-60024	* I/O Control Card (A7) (see figure 2-8)	28480	02100-60024	1
14	02100-60007	* I/O Buffer Card (A8) (see figure 2-9)	28480	02100-60007	1
15	12895-60001	* Direct Memory Access Card (A9) (see figure 2-10)	28480	12895-60001	1
16	02100-60060	* I/O Terminator Card (A16) (see figure 2-11)	28480	02100-60060	1
17	02100-60012	* X-Y Driver/Switch Card (A101) (12K thru 32K Memory only) (see figure 2-12)	28480	02100-60012	1
18♠	02100-60040	* Core Stack/Sense Amplifier Card (A102) (12K Memory only) (see figure 2-13)	28480	02100-60040	1
	5060-8324 or 5060-8331	* Core Stack/Sense Amplifier Card (A102) (16K thru 32K Memory only) (see figure 2-14)	28480	5060-8324 or 5060-8331	1
19♠	02100-60040	* Core Stack/Sense Amplifier Card (A103) (4K Memory only) (see figure 2-13)	28480	02100-60040	1
	5060-8324 or 5060-8331	* Core Stack/Sense Amplifier Card (A103) (8K thru 32K Memory only) (see figure 2-14)	28480	5060-8324 or 5060-8331	1
20	02100-60012	* X-Y Driver/Switch Card (A104) (4K thru 32K Memory) (see figure 2-12)	28480	02100-60012	1
21	02100-60008	* Inhibit Driver Card (A105) (4K thru 8K Memory only) (see figure 2-15)	28480	02100-60008	1
	02100-60009	* Inhibit Driver Card (A105) (12K thru 32K Memory only) (see figure 2-16)	28480	02100-60009	1
22	02100-60010	* Inhibit Driver Load Card (A106) (4K thru 32K Memory) (see figure 2-17)	28480	02100-60010	1
23	02100-60011	* Data Control Card (A107) (4K thru 32K Memory) (see figure 2-18)	28480	02100-60011	1
24	02100-60009	* Inhibit Driver Card (A108) (24K or 32K Memory only) (see figure 2-16)	28480	02100-60009	1
25	02100-60012	* X-Y Driver/Switch Card (A109) (12K, 24K, or 32K Memory only) (see figure 2-12)	28480	02100-60012	1
26♠	5060-8324 or 5060-8331	* Core Stack/Sense Amplifier Card (A110) (24K or 32K Memory only) (see figure 2-14)	28480	5060-8324 or 5060-8331	1
27♠	5060-8324 or 5060-8331	* Core Stack/Sense Amplifier Card (A111) (32K Memory only) (see figure 2-14)	28480	5060-8324 or 5060-8331	1
28	02100-60012	* X-Y Driver/Switch Card (A112) (32K Memory only) (see figure 2-12)	28480	02100-60012	1
29	02100-20014	* Bezel, front (Attaching Parts)	28480	02100-20014	1
30	3030-0034	* Screw, Cap, Socket Head, No. 10-24, 1/2 in. ---x---	00000	OBD	4
31	02100-00039	* Screen, front bezel	28480	02100-00039	2
32	No Number	* Operator Panel Assembly (A24) (see figure 2-19)		No Number	1

NOTES:
† Quantity 1 for 4K thru 24K, 2 for 32K Memory.
†† Quantity 0 for 4K and 8K, 1 for 12K and 16K, 2 for 24K and 32K Memory.
♠ Part no. 5060-8324 and 5060-8331 are interchangeable. Order 5060-8331 for replacement.

Table 2-1. HP 2100A Computer, Replaceable Parts (Continued)

FIG & INDEX NO.	HP PART NO.	DESCRIPTION	MFR CODE	MFR PART NO.	UNITS PER ASSY
2-1-					
	No Number	* Controller Panel Assembly (A24) (option 001 only) (see figure 2-20)		No Number	1
		(Attaching Parts)			
33	2200-0143	* Screw, Machine, ph, No. 4-40, 3/8 in.	00000	OBD	4
34	3050-0229	* Washer, Flat, No. 4	00000	OBD	4
		– – – x – – –			
35	5060-8716	* Cover, Access, bottom	28480	5060-8716	1
		(Attaching Parts)			
36	2360-0200	* Screw, Machine, flh, No. 6-32, 1/2 in.	00000	OBD	5
		– – – x – – –			
37	5060-0767	* Foot, Rubber	28480	5060-0767	5
38	02100-00041	* Cover, Access, side	28480	02100-00041	2
		(Attaching Parts)			
39	2360-0200	* Screw, Machine, flh, No. 6-32, 1/2 in.	00000	OBD	6
		– – – x – – –			
40	02100-00123	* Cover, Safety	28480	02100-00123	1
		(Attaching Parts)			
	2360-0192	* Screw, Machine, ph, No. 6-32, 1/4 in.	00000	OBD	4
	2190-0851	* Washer, Lock, split, No. 6	00000	OBD	4
		– – – x – – –			
41	02100-60053	* Power Supply Assembly (A25) (see manual part no. 5951-3038)	28480	02100-60053	1
		(Attaching Parts)			
42	2510-0050	* Screw, Assembled Washer, flh, No. 8-32, 1/2 in.	00000	OBD	4
43	2510-0107	* Screw, Machine, ph, No. 8-32, 1/2 in.	00000	OBD	2
44	2190-0076	* Washer, Lock, split, No. 8	00000	OBD	2
45	2360-0197	* Screw, Machine, ph, No. 6-32, 3/8 in.	00000	OBD	4
46	2190-0851	* Washer, Lock, split, No. 6	00000	OBD	4
47	3050-0227	* Washer, Flat, No. 6	00000	OBD	4
		– – – x – – –			
48	5000-2595	* Spacer, Plate, power supply	28480	5000-2595	1
49	02100-60041	* Plenum Chamber Assembly (A26) (see figure 2-23)		02100-60041	1
		(Attaching Parts)			
50	2510-0050	* Screw, Assembled Washer, flh, No. 8-32, 1/2 in.	00000	OBD	4
51	2360-0197	* Screw, Machine, ph, No. 6-32, 3/8 in.	00000	OBD	2
52	2190-0851	* Washer, Lock, split, No. 6	00000	OBD	2
53	2360-0197	* Screw, Machine, ph, No. 6-32, 3/8 in.	00000	OBD	4
54	2190-0851	* Washer, Lock, split, No. 6	00000	OBD	4
		– – – x – – –			
55	5000-2595	* Spacer, Plate, plenum chamber assembly	28480	5000-2595	1
56	02100-60057	* Handle Assembly	28480	02100-60057	2
		(Attaching Parts)			
	2510-0103	* Screw, Machine, ph, No. 8-32, 3/8 in.	00000	OBD	2
	2190-0073	* Washer, Lock, split, No. 8	00000	OBD	2
		– – – x – – –			
57▲	02100-00002	* Deflector, Airflow	28480	02100-00002	2
		(Attaching Parts)			
	2510-0108	* Screw, Machine, flh, No. 8-32, 5/8 in.	00000	OBD	6
	2190-0048	* Washer, Lock, countersunk, No. 8	00000	OBD	6
		– – – x – – –			
58	1400-0126	* Clamp, Cable	09922	HP-4N	6
		(Attaching Parts)			
	2510-0123	* Screw, Machine, flh, No. 8-32, 1/2 in.	00000	OBD	1
	2190-0076	* Washer, Lock, split, No. 8	00000	OBD	3
	3050-0139	* Washer, Flat, No. 8	00000	OBD	1
	2580-0004	* Nut, Plain, Hexagon, No. 8	00000	OBD	1
		– – – x – – –			
59	02100-00029	* Molding, metal (adhesive backed)	28480	02100-00029	2
60	02100-20012	* Bar, Mounting, bezel	28480	02100-20012	4
		(Attaching Parts)			
61	2510-0050	* Screw, Assembled Washer, flh, No. 8-32, 1/2 in.	00000	OBD	1
		– – – x – – –			
62	0590-0053	* Nut, Sheet Spring	78553	C17859-632-24D	4
63	02100-20015	* Frame, left side	28480	02100-20015	1
		(Attaching Parts)			
64	2510-0050	* Screw, Assembled Washer, flh, No. 8-32, 1/2 in.	00000	OBD	12
		– – – x – – –			

Note: ▲ Airflow deflectors and attaching parts are used on early model computers only.

Table 2-1. HP 2100A Computer, Replaceable Parts (Continued)

FIG & INDEX NO.	HP PART NO.	DESCRIPTION	MFR CODE	MFR PART NO.	UNITS PER ASSY
2-1-					
65	02100-00166	• Bracket, Mounting, power supply	28480	02100-00166	1
		(Attaching Parts)			
	2510-0050	• Screw, Assembled Washer, flh, No. 8-32, 1/2 in.	00000	OBD	2
		– – – x – – –			
66	02100-20015	• Frame, right side	28480	02100-20015	1
		(Attaching Parts)			
	2510-0050	• Screw, Assembled Washer, flh, No. 8-32, 1/2 in.	00000	OBD	6
		– – – x – – –			
67	1251-2364	• Connector, PC card, 86-pin (XA24)	00779	2-67015-1	1
		(Attaching Parts)			
	2360-0205	• Screw, Machine, ph, No. 6-32, 3/4 in.	00000	OBD	2
	2420-0001	• Nut, Assembled Washer, No. 6-32	00000	OBD	2
		– – – x – – –			
68	02100-20001	• Bracket, Connector	28480	02100-20001	2
		(Attaching Parts)			
	2200-0143	• Screw, Machine, ph, No. 4-40, 3/8 in.	00000	OBD	2
	2190-0108	• Washer, Lock, split, No. 4	00000	OBD	2
		– – – x – – –			
69	4320-0002	• Grommet, Rubber, 8 in. long	28480	4320-0002	1
70★	3103-0015	• Switch, Thermal (75°F) (S3)	14604	3001	1
		(Attaching Parts)			
	2420-0003	• Nut, Plain, Hexagon, No 6-32	00000	OBD	1
	2190-0851	• Washer, Lock, split, No. 6	00000	OBD	1
		– – – x – – –			
71♦	3103-0015	• Switch, Thermal (75°F) (S3)	14604	3001	1
72♦	02116-0033	• Clip, Retaining, thermal switch	28480	02116-0033	1
		(Attaching Parts)			
	2200-0143	• Screw, Machine, ph, No. 4-40, 3/8 in.	00000	OBD	1
	2190-0108	• Washer, Lock, split, No. 4	00000	OBD	1
		– – – x – – –			
73	5020-1922	• Spacer, Sleeve, Nylon, int-thread, No 4 1/4 in. OD, 1/2 in. long	28480	5020-1922	4
		(Attaching Parts)			
	2200-0143	• Screw, Machine, ph, No. 4-40, 3/8 in.	00000	OBD	1
	2190-0108	• Washer, Lock, split, No. 4	00000	OBD	1
		– – – x – – –			
74	02100-60051	• Power Switch Assembly (see figure 2-24)	28480	02100-60051	1
		(Attaching Parts)			
	2360-0197	• Screw, Machine, ph, No. 6-32, 3/8 in.	00000	OBD	2
	2190-0851	• Washer, Lock, split, No. 6	00000	OBD	2
		– – – x – – –			
75	02100-00138	• Bracket, Protect	28480	02100-00138	1
		(Attaching Parts)			
	0520-0089	• Screw, Machine, flh, No. 2-56, 3/8 in.	00000	OBD	2
		– – – x – – –			
76	02100-00018	• Front Panel	28480	02100-00018	1
		(Attaching Parts)			
77	2360-0197	• Screw, Machine, ph, No. 6-32, 3/8 in.	00000	OBD	2
	2190-0851	• Washer, Lock, split, No. 6	00000	OBD	2
		– – – x – – –			
78	No Number	• Card Cage Assembly (cannot be ordered as a complete unit) (see figure 2-25)			1
		(The following items are part of the 2100A Computer but are not shown in figure 2-1)			
	5060-8744	• Kit, Rack Mounting	28480	5060-8744	1
	5951-3038	• Power Supply Operating and Service Manual	28480	5951-3038	1
	02100-90001	• HP 2100A Reference Manual	28480	02100-90001	1
	02100-90002	• HP 2100A Installation and Maintenance Manual	28480	02100-90002	1
	02100-90003	• HP 2100A Diagrams Manual	28480	02100-90003	1
	02100-90004	• HP 2100A Illustrated Parts Breakdown Manual	28480	02100-90004	1

NOTES:
♦ Used on original equipment. Replace with same part numbers.
★ Used on later equipment. Replace with same part number.

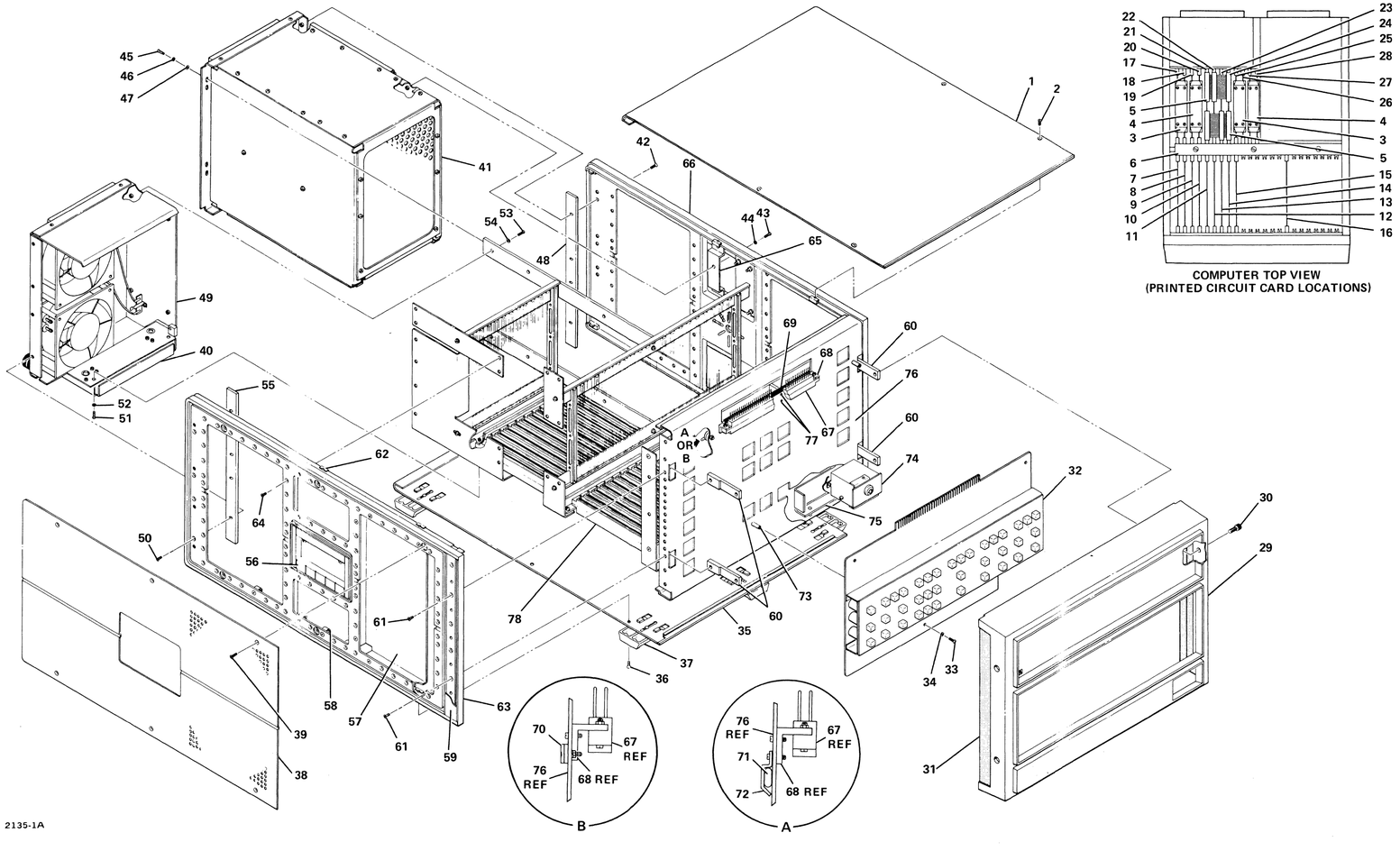

COMPUTER TOP VIEW
(PRINTED CIRCUIT CARD LOCATIONS)

Figure 2-1. HP 2100A Computer, Exploded View

Table 2-2. A1 Timing and Control Card, Replaceable Parts

Reference Designation	HP Part Number	Qty	Description	Mfr Code	Mfr Part Number
A1	02100-60014	1	TIMING AND CONTROL CARD	28480	02100-60014
A1C1	0180-0197	6	C:FXD ELECT 2.2 UF 10% 20VDCW	56289	150D225X9020A2-DYS
A1C2	0180-0197		C:FXD ELECT 2.2 UF 10% 20VDCW	56289	150D225X9020A2-DYS
A1C3	0160-2055	28	C:FXD CER 0.01 UF +80-20% 100VDCW	56289	C023F101F103ZS22-CDH
A1C4	0160-2055		C:FXD CER 0.01 UF +80-20% 100VDCW	56289	C023F101F103ZS22-CDH
A1C5	0160-2055		C:FXD CER 0.01 UF +80-20% 100VDCW	56289	C023F101F103ZS22-CDH
A1C6	0160-2055		C:FXD CER 0.01 UF +80-20% 100VDCW	56289	C023F101F103ZS22-CDH
A1C7	0160-2055		C:FXD CER 0.01 UF +80-20% 100VDCW	56289	C023F101F103ZS22-CDH
A1C8	0160-2055		C:FXD CER 0.01 UF +80-20% 100VDCW	56289	C023F101F103ZS22-CDH
A1C9	0160-2055		C:FXD CER 0.01 UF +80-20% 100VDCW	56289	C023F101F103ZS22-CDH
A1C10	0160-2055		C:FXD CER 0.01 UF +80-20% 100VDCW	56289	C023F101F103ZS22-CDH
A1C11	0160-2055		C:FXD CER 0.01 UF +80-20% 100VDCW	56289	C023F101F103ZS22-CDH
A1C12	0160-2055		C:FXD CER 0.01 UF +80-20% 100VDCW	56289	C023F101F103ZS22-CDH
A1C13	0160-2055		C:FXD CER 0.01 UF +80-20% 100VDCW	56289	C023F101F103ZS22-CDH
A1C14	0160-2055		C:FXD CER 0.01 UF +80-20% 100VDCW	56289	C023F101F103ZS22-CDH
A1C15	0180-0197		C:FXD ELECT 2.2 UF 10% 20VDCW	56289	150D225X9020A2-DYS
A1C16	0160-2055		C:FXD CER 0.01 UF +80-20% 100VDCW	56289	C023F101F103ZS22-CDH
A1C17	0160-2055		C:FXD CER 0.01 UF +80-20% 100VDCW	56289	C023F101F103ZS22-CDH
A1C18	0160-2055		C:FXD CER 0.01 UF +80-20% 100VDCW	56289	C023F101F103ZS22-CDH
A1C19	0160-2055		C:FXD CER 0.01 UF +80-20% 100VDCW	56289	C023F101F103ZS22-CDH
A1C20	0180-0197		C:FXD ELECT 2.2 UF 10% 20VDCW	56289	150D225X9020A2-DYS
A1C21	0160-2055		C:FXD CER 0.01 UF +80-20% 100VDCW	56289	C023F101F103ZS22-CDH
A1C22	0160-2055		C:FXD CER 0.01 UF +80-20% 100VDCW	56289	C023F101F103ZS22-CDH
A1C23	0160-2055		C:FXD CER 0.01 UF +80-20% 100VDCW	56289	C023F101F103ZS22-CDH
A1C24	0160-2055		C:FXD CER 0.01 UF +80-20% 100VDCW	56289	C023F101F103ZS22-CDH
A1C25	0160-2055		C:FXD CER 0.01 UF +80-20% 100VDCW	56289	C023F101F103ZS22-CDH
A1C26	0160-2055		C:FXD CER 0.01 UF +80-20% 100VDCW	56289	C023F101F103ZS22-CDH
A1C27	0180-0197		C:FXD ELECT 2.2 UF 10% 20VDCW	56289	150D225X9020A2-DYS
A1C28	0180-0197		C:FXD ELECT 2.2 UF 10% 20VDCW	56289	150D225X9020A2-DYS
A1C29	0140-0198	1	C:FXD MICA 200 PF 5%	72136	RDM15F201J3C
A1C30	0160-2055		C:FXD CER 0.01 UF +80-20% 100VDCW	56289	C023F101F103ZS22-CDH
A1C31	0160-2055		C:FXD CER 0.01 UF +80-20% 100VDCW	56289	C023F101F103ZS22-CDH
A1C32	0160-2055		C:FXD CER 0.01 UF +80-20% 100VDCW	56289	C023F101F103ZS22-CDH
A1C33	0160-2055		C:FXD CER 0.01 UF +80-20% 100VDCW	56289	C023F101F103ZS22-CDH
A1C34	0160-2055		C:FXD CER 0.01 UF +80-20% 100VDCW	56289	C023F101F103ZS22-CDH
A1C35	0160-2055		C:FXD CER 0.01 UF +80-20% 100VDCW	56289	C023F101F103ZS22-CDH
A1E1	0360-0294	5	TERMINAL:SOLDER POINT	28480	0360-0294
A1E2	0360-0294		TERMINAL:SOLDER POINT	28480	0360-0294
A1E3	0360-0294		TERMINAL:SOLDER POINT	28480	0360-0294
A1E4	0360-0294		TERMINAL:SOLDER POINT	28480	0360-0294
A1E5	0360-0294		TERMINAL:SOLDER POINT	28480	0360-0294
A1R1	0757-0280	15	R:FXD MET FLM 1K OHM 1% 1/8W	28480	0757-0280
A1R2	0757-1094	3	R:FXD MET FLM 1.47K OHM 1% 1/8W	28480	0757-1094
A1R3	0698-3446	3	R:FXD MET FLM 383 OHM 1% 1/8W	28480	0698-3446
A1R4	0698-3446		R:FXD MET FLM 383 OHM 1% 1/8W	28480	0698-3446
A1R5	0757-0284	1	R:FXD MET FLM 150 OHM 1% 1/8W	28480	0757-0284
A1R6	0757-0280		R:FXD MET FLM 1K OHM 1% 1/8W	28480	0757-0280
A1R7	0757-0416	13	R:FXD MET FLM 511 OHM 1% 1/8W	28480	0757-0416
A1R8	0757-0416		R:FXD MET FLM 511 OHM 1% 1/8W	28480	0757-0416
A1R9	0757-0416		R:FXD MET FLM 511 OHM 1% 1/8W	28480	0757-0416
A1R10	0757-0416		R:FXD MET FLM 511 OHM 1% 1/8W	28480	0757-0416
A1R11	0757-0416		R:FXD MET FLM 511 OHM 1% 1/8W	28480	0757-0416
A1R12	0757-0416		R:FXD MET FLM 511 OHM 1% 1/8W	28480	0757-0416
A1R13	0757-0416		R:FXD MET FLM 511 OHM 1% 1/8W	28480	0757-0416
A1R14	0757-0280		R:FXD MET FLM 1K OHM 1% 1/8W	28480	0757-0280
A1R15	0757-0280		R:FXD MET FLM 1K OHM 1% 1/8W	28480	0757-0280
A1R16	0757-0416		R:FXD MET FLM 511 OHM 1% 1/8W	28480	0757-0416
A1R17	0757-0416		R:FXD MET FLM 511 OHM 1% 1/8W	28480	0757-0416
A1R18	0757-0280		R:FXD MET FLM 1K OHM 1% 1/8W	28480	0757-0280
A1R19	0757-0280		R:FXD MET FLM 1K OHM 1% 1/8W	28480	0757-0280
A1R20	0757-0280		R:FXD MET FLM 1K OHM 1% 1/8W	28480	0757-0280
A1R21	0698-3440	1	R:FXD MET FLM 196 OHM 1% 1/8W	28480	0698-3440
A1R22	0757-0416		R:FXD MET FLM 511 OHM 1% 1/8W	28480	0757-0416
A1R23	0757-1094		R:FXD MET FLM 1.47K OHM 1% 1/8W	28480	0757-1094
A1R24	0757-0416		R:FXD MET FLM 511 OHM 1% 1/8W	28480	0757-0416
A1R25	0757-1094		R:FXD MET FLM 1.47K OHM 1% 1/8W	28480	0757-1094
A1R26	0698-3446		R:FXD MET FLM 383 OHM 1% 1/8W	28480	0698-3446
A1R27	0757-0416		R:FXD MET FLM 511 OHM 1% 1/8W	28480	0757-0416
A1R28	0683-1825	2	R:FXD COMP 1800 OHM 5% 1/4W	01121	CB 1825
A1R29	0683-1025	2	R:FXD COMP 1000 OHM 5% 1/4W	01121	CB 1025
A1R30	0683-1825		R:FXD COMP 1800 OHM 5% 1/4W	01121	CB 1825
A1R31	0683-1025		R:FXD COMP 1000 OHM 5% 1/4W	01121	CB 1025
A1R32	0757-0280		R:FXD MET FLM 1K OHM 1% 1/8W	28480	0757-0280
A1R33	0757-0280		R:FXD MET FLM 1K OHM 1% 1/8W	28480	0757-0280
A1R34	0757-0280		R:FXD MET FLM 1K OHM 1% 1/8W	28480	0757-0280

Table 2-2. A1 Timing and Control Card, Replaceable Parts (Continued)

Reference Designation	HP Part Number	Qty	Description	Mfr Code	Mfr Part Number
A1R35	0757-0280		R:FXD MET FLM 1K OHM 1% 1/8W	28480	0757-0280
A1R36	0757-0280		R:FXD MET FLM 1K OHM 1% 1/8W	28480	0757-0280
A1R37	0757-0280		R:FXD MET FLM 1K OHM 1% 1/8W	28480	0757-0280
A1R38	0757-0280		R:FXD MET FLM 1K OHM 1% 1/8W	28480	0757-0280
A1R39	0698-3442	1	R:FXD MET FLM 237 OHM 1% 1/8W	28480	0698-3442
A1R40	0757-0416		R:FXD MET FLM 511 OHM 1% 1/8W	28480	0757-0416
A1R41	0757-0280		R:FXD MET FLM 1K OHM 1% 1/8W	28480	0757-0280
A1S1	3101-1213	2	SWITCH:TOGGLE DPST-DB SUB-MINIATURE	81640	T8001
A1S2	3101-1213		SWITCH:TOGGLE DPST-DB SUB-MINIATURE	81640	T8001
A1U13	1820-0141	4	IC:TTL QUAD 2-INPT AND GATE	04713	MC3001P
A1U14	1820-0370	6	IC:TTL HS QUAD 2-INPT NAND GATE	01295	SN74H00N
A1U15	1820-0485	4	IC:CTL HEX LEVEL RESTORER	07263	U6B981649X
A1U16	1820-0424	5	IC:TTL HS HEX INVERTER	04713	SN74H04N
A1U17	1820-0954	2	IC:CTL DUAL 4-INPT AND GATE	07263	U6A995479X
A1U23	1820-0186	5	IC:CTL DUAL 2-INPT AND GATE	07263	U6A985649X
A1U24	1820-0966	4	IC:CTL DUAL 2-INPT AND 2W AND/OR GATE	14433	MIC 966
A1U25	1820-0187	1	IC:CTL DUAL 2-INPT NOR GATE	07263	U6A985249X
A1U26	1820-0424		IC:TTL HS HEX INVERTER	04713	SN74H04N
A1U27	1820-0954		IC:CTL DUAL 4-INPT AND GATE	07263	U6A995479X
A1U33	1820-0965	3	IC:CTL QUAD 1-INPT AND GATE	07263	U6A996579X
A1U34	1820-0186		IC:CTL DUAL 2-INPT AND GATE	07263	U6A985649X
A1U35	1820-0186		IC:CTL DUAL 2-INPT AND GATE	07263	U6A985649X
A1U36	1820-0964	3	IC:CTL TRIPLE 3-3-1 INPT AND GATE	14433	MIC 964
A1U37	1820-0964		IC:CTL TRIPLE 3-3-1 INPT AND GATE	14433	MIC 964
A1U43	1820-0965		IC:CTL QUAD 1-INPT AND GATE	07263	U6A996579X
A1U44	1820-0965		IC:CTL QUAD 1-INPT AND GATE	07263	U6A996579X
A1U45	1820-0966		IC:CTL DUAL 2-INPT AND 2W AND/OR GATE	14433	MIC 966
A1U46	1820-0966		IC:CTL DUAL 2-INPT AND 2W AND/OR GATE	14433	MIC 966
A1U47	1820-0186		IC:CTL DUAL 2-INPT AND GATE	07263	U6A985649X
A1U53	1820-0512	1	IC:TTL DUAL D F/F	01295	SN74H74N
A1U54	1820-0370		IC:TTL HS QUAD 2-INPT NAND GATE	01295	SN74H00N
A1U55	1820-0609	5	IC:TTL DUAL J-K F/F W/COM. CLK & RESET	04713	MC3061P
A1U56	1820-0609		IC:TTL DUAL J-K F/F W/COM. CLK & RESET	04713	MC3061P
A1U57	1820-0964		IC:CTL TRIPLE 3-3-1 INPT AND GATE	14433	MIC 964
A1U63	1820-0485		IC:CTL HEX LEVEL RESTORER	07263	U6B981649X
A1U64	1820-0370		IC:TTL HS QUAD 2-INPT NAND GATE	01295	SN74H00N
A1U65	1820-0370		IC:TTL HS QUAD 2-INPT NAND GATE	01295	SN74H00N
A1U66	1820-0141		IC:TTL QUAD 2-INPT AND GATE	04713	MC3001P
A1U67	1820-0186		IC:CTL DUAL 2-INPT AND GATE	07263	U6A985649X
A1U71	1820-0371	3	IC:TTL HS TRIPLE 3-INPT NAND GATE	01295	SN74H10N
A1U72	1820-0424		IC:TTL HS HEX INVERTER	04713	SN74H04N
A1U73	1820-0141		IC:TTL QUAD 2-INPT AND GATE	04713	MC3001P
A1U74	1820-0609		IC:TTL DUAL J-K F/F W/COM. CLK & RESET	04713	MC3061P
A1U75	1820-0371		IC:TTL HS TRIPLE 3-INPT NAND GATE	01295	SN74H10N
A1U76(NOTE 1)	1820-0451	2	IC:TTL DUAL J-K F/F	04713	MC3062P
A1U77	1820-0966		IC:CTL DUAL 2-INPT AND 2W AND/OR GATE	14433	MIC 966
A1U81(NOTE 1)	1820-0451		IC:TTL DUAL J-K F/F	04713	MC3062P
A1U82	1820-0141		IC:TTL QUAD 2-INPT AND GATE	04713	MC3001P
A1U83	1820-0609		IC:TTL DUAL J-K F/F W/COM. CLK & RESET	04713	MC3061P
A1U84	1820-0372	3	IC:TTL TRIPLE 3-INPT AND GATE	28480	1820-0372
A1U85	1820-0609		IC:TTL DUAL J-K F/F W/COM. CLK & RESET	04713	MC3061P
A1U86	1820-0424		IC:TTL HS HEX INVERTER	04713	SN74H04N
A1U87	1820-0374	1	IC:TTL HS DUAL 4-INPT AND GATE	01295	SN74H21N
A1U92	1820-0681	1	IC:TTL QUAD 2-INPT NAND GATE	01295	SN74S00N
A1U93	1820-0370		IC:TTL HS QUAD 2-INPT NAND GATE	01295	SN74H00N
A1U94	1820-0485		IC:CTL HEX LEVEL RESTORER	07263	U6B981649X
A1U95	1820-0371		IC:TTL HS TRIPLE 3-INPT NAND GATE	01295	SN74H10N
A1U96	1820-0370		IC:TTL HS QUAD 2-INPT NAND GATE	01295	SN74H00N
A1U97	1820-0424		IC:TTL HS HEX INVERTER	04713	SN74H04N
A1U102	1820-0140	2	IC:TTL DUAL 4-INPT AND BUFFER	04713	MC3026P
A1U103	1820-0140		IC:TTL DUAL 4-INPT AND BUFFER	04713	MC3026P
A1U104	1820-0372		IC:TTL TRIPLE 3-INPT AND GATE	28480	1820-0372
A1U105	1820-0372		IC:TTL TRIPLE 3-INPT AND GATE	28480	1820-0372
A1U106	1820-0373	1	IC:TTL HS DUAL 4-INPT NAND GATE	01295	SN74H20N
A1U107	1820-0485		IC:CTL HEX LEVEL RESTORER	07263	U6B981649X
A1XY1	1200-0199	1	SOCKET:CRYSTAL	91506	8000-AG9
A1Y1	0410-0432	1	CRYSTAL:QUARTZ	28480	0410-0432

NOTES: 1. Part no. 1820-0695 used on some cards; the two parts are interchangeable.

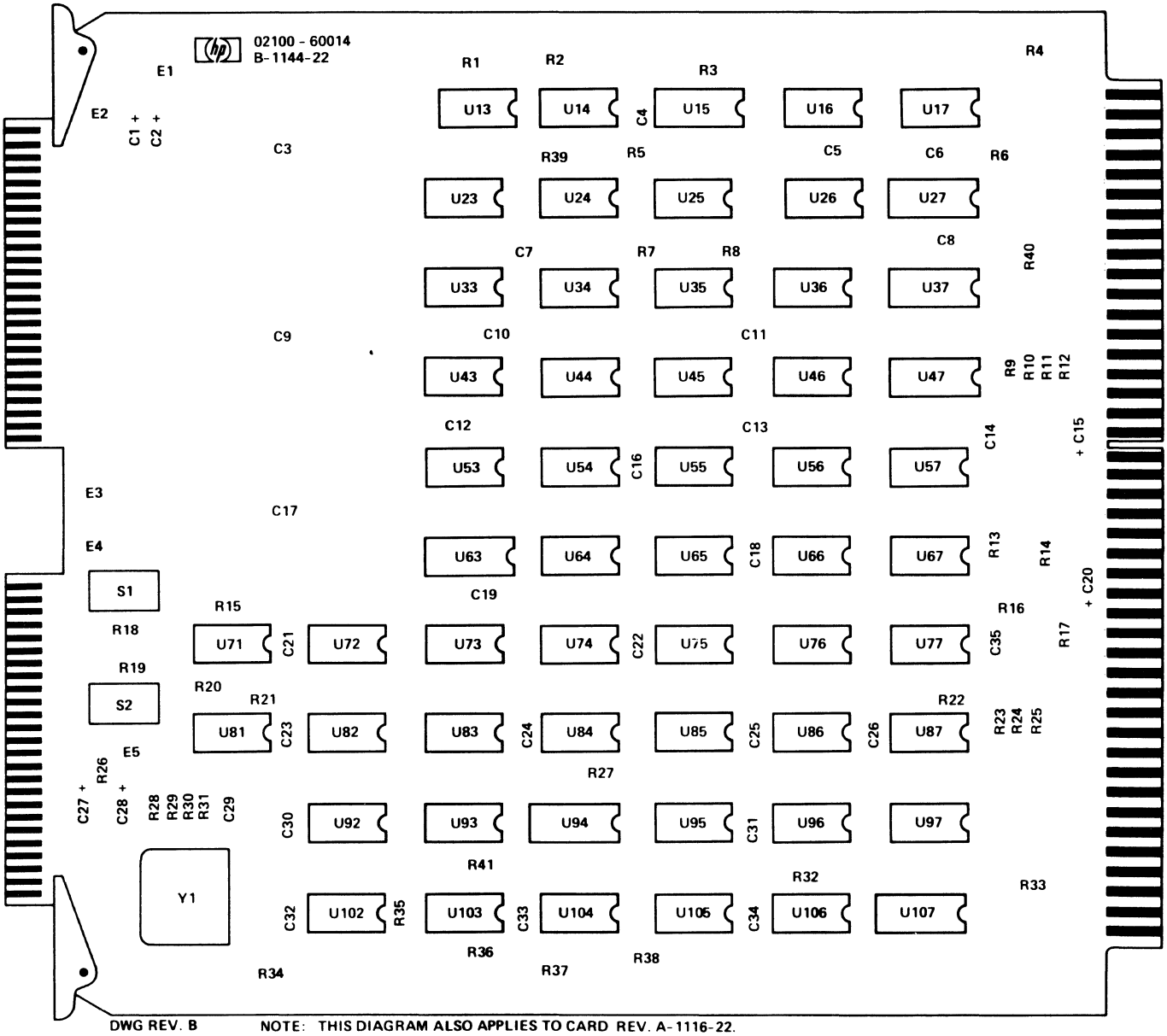

Figure 2-2. A1 Timing and Control Card, Parts Location Diagram

Table 2-3. A2 ROM Control Card, Replaceable Parts

Reference Designation	HP Part Number	Qty	Description	Mfr Code	Mfr Part Number
A2	02100-60002	1	ROM CONTROL CARD	28480	02100-60002
A2C1	0160-2055	26	C:FXD CER 0.01 UF +80-20% 100VDCW	56289	C023F101F103ZS22-CDH
A2C2	0160-2055		C:FXD CER 0.01 UF +80-20% 100VDCW	56289	C023F101F103ZS22-CDH
A2C3	0160-2055		C:FXD CER 0.01 UF +80-20% 100VDCW	56289	C023F101F103ZS22-CDH
A2C4	0180-0197	6	C:FXD ELECT 2.2 UF 10% 20VDCW	56289	150D225X9020A2-DYS
A2C5	0180-0197		C:FXD ELECT 2.2 UF 10% 20VDCW	56289	150D225X9020A2-DYS
A2C6	0160-2055		C:FXD CER 0.01 UF +80-20% 100VDCW	56289	C023F101F103ZS22-CDH
A2C7	0160-2055		C:FXD CER 0.01 UF +80-20% 100VDCW	56289	C023F101F103ZS22-CDH
A2C8	0160-2055		C:FXD CER 0.01 UF +80-20% 100VDCW	56289	C023F101F103ZS22-CDH
A2C9	0160-2055		C:FXD CER 0.01 UF +80-20% 100VDCW	56289	C023F101F103ZS22-CDH
A2C10	0160-2055		C:FXD CER 0.01 UF +80-20% 100VDCW	56289	C023F101F103ZS22-CDH
A2C11	0160-2055		C:FXD CER 0.01 UF +80-20% 100VDCW	56289	C023F101F103ZS22-CDH
A2C12	0160-2055		C:FXD CER 0.01 UF +80-20% 100VDCW	56289	C023F101F103ZS22-CDH
A2C13	0160-2055		C:FXD CER 0.01 UF +80-20% 100VDCW	56289	C023F101F103ZS22-CDH
A2C14	0160-2055		C:FXD CER 0.01 UF +80-20% 100VDCW	56289	C023F101F103ZS22-CDH
A2C15	0180-0197		C:FXD ELECT 2.2 UF 10% 20VDCW	56289	150D225X9020A2-DYS
A2C16	0160-2055		C:FXD CER 0.01 UF +80-20% 100VDCW	56289	C023F101F103ZS22-CDH
A2C17	0160-2055		C:FXD CER 0.01 UF +80-20% 100VDCW	56289	C023F101F103ZS22-CDH
A2C18	0160-2055		C:FXD CER 0.01 UF +80-20% 100VDCW	56289	C023F101F103ZS22-CDH
A2C19	0180-0197		C:FXD ELECT 2.2 UF 10% 20VDCW	56289	150D225X9020A2-DYS
A2C20	0160-2055		C:FXD CER 0.01 UF +80-20% 100VDCW	56289	C023F101F103ZS22-CDH
A2C21	0160-2055		C:FXD CER 0.01 UF +80-20% 100VDCW	56289	C023F101F103ZS22-CDH
A2C22	0160-2055		C:FXD CER 0.01 UF +80-20% 100VDCW	56289	C023F101F103ZS22-CDH
A2C23	0160-2055		C:FXD CER 0.01 UF +80-20% 100VDCW	56289	C023F101F103ZS22-CDH
A2C24	0160-2055		C:FXD CER 0.01 UF +80-20% 100VDCW	56289	C023F101F103ZS22-CDH
A2C25	0180-0197		C:FXD ELECT 2.2 UF 10% 20VDCW	56289	150D225X9020A2-DYS
A2C26	0180-0197		C:FXD ELECT 2.2 UF 10% 20VDCW	56289	150D225X9020A2-DYS
A2C27	0160-2055		C:FXD CER 0.01 UF +80-20% 100VDCW	56289	C023F101F103ZS22-CDH
A2C28	0160-2055		C:FXD CER 0.01 UF +80-20% 100VDCW	56289	C023F101F103ZS22-CDH
A2C29	0160-2055		C:FXD CER 0.01 UF +80-20% 100VDCW	56289	C023F101F103ZS22-CDH
A2C30	0160-2055		C:FXD CER 0.01 UF +80-20% 100VDCW	56289	C023F101F103ZS22-CDH
A2C31	0160-2055		C:FXD CER 0.01 UF +80-20% 100VDCW	56289	C023F101F103ZS22-CDH
A2C32	0160-2055		C:FXD CER 0.01 UF +80-20% 100VDCW	56289	C023F101F103ZS22-CDH
A2E1	0360-0294	3	TERMINAL:SOLDER POINT	28480	0360-0294
A2E2	0360-0294		TERMINAL:SOLDER POINT	28480	0360-0294
A2E3	0360-0294		TERMINAL:SOLDER POINT	28480	0360-0294
A2R1	0698-7229	42	R:FXD FLM 511 OHM 2% 1/8W	28480	0698-7229
A2R2	0698-7229		R:FXD FLM 511 OHM 2% 1/8W	28480	0698-7229
A2R3	0698-7229		R:FXD FLM 511 OHM 2% 1/8W	28480	0698-7229
A2R4	0698-7229		R:FXD FLM 511 OHM 2% 1/8W	28480	0698-7229
A2R5	0698-7229		R:FXD FLM 511 OHM 2% 1/8W	28480	0698-7229
A2R6	0698-7229		R:FXD FLM 511 OHM 2% 1/8W	28480	0698-7229
A2R7	0698-7229		R:FXD FLM 511 OHM 2% 1/8W	28480	0698-7229
A2R8	0698-7229		R:FXD FLM 511 OHM 2% 1/8W	28480	0698-7229
A2R9	0698-7229		R:FXD FLM 511 OHM 2% 1/8W	28480	0698-7229
A2R10	0698-7229		R:FXD FLM 511 OHM 2% 1/8W	28480	0698-7229
A2R11	0698-7229		R:FXD FLM 511 OHM 2% 1/8W	28480	0698-7229
A2R12	0698-7229		R:FXD FLM 511 OHM 2% 1/8W	28480	0698-7229
A2R13	0698-7229		R:FXD FLM 511 OHM 2% 1/8W	28480	0698-7229
A2R14	0698-7226	2	R:FXD FLM 383 OHM 2% 1/8W	28480	0698-7226
A2R15	0698-7229		R:FXD FLM 511 OHM 2% 1/8W	28480	0698-7229
A2R16	0698-7229		R:FXD FLM 511 OHM 2% 1/8W	28480	0698-7229
A2R17	0698-7229		R:FXD FLM 511 OHM 2% 1/8W	28480	0698-7229
A2R18	0698-7229		R:FXD FLM 511 OHM 2% 1/8W	28480	0698-7229
A2R19	0698-7236	6	R:FXD FLM 1K OHM 2% 1/8W	28480	0698-7236
A2R20	0698-7236		R:FXD FLM 1K OHM 2% 1/8W	28480	0698-7236
A2R21	0698-7229		R:FXD FLM 511 OHM 2% 1/8W	28480	0698-7229
A2R22	0698-7229		R:FXD FLM 511 OHM 2% 1/8W	28480	0698-7229
A2R23	0698-7229		R:FXD FLM 511 OHM 2% 1/8W	28480	0698-7229
A2R24	0698-7229		R:FXD FLM 511 OHM 2% 1/8W	28480	0698-7229
A2R25	0698-7229		R:FXD FLM 511 OHM 2% 1/8W	28480	0698-7229
A2R26	0698-7236		R:FXD FLM 1K OHM 2% 1/8W	28480	0698-7236
A2R27	0698-7225	15	R:FXD FLM 348 OHM 2% 1/8W	28480	0698-7225
A2R28	0698-7225		R:FXD FLM 348 OHM 2% 1/8W	28480	0698-7225
A2R29	0698-7229		R:FXD FLM 511 OHM 2% 1/8W	28480	0698-7229
A2R30	0698-7229		R:FXD FLM 511 OHM 2% 1/8W	28480	0698-7229
A2R31	0698-7225		R:FXD FLM 348 OHM 2% 1/8W	28480	0698-7225
A2R32	0698-7229		R:FXD FLM 511 OHM 2% 1/8W	28480	0698-7229
A2R33	0698-7229		R:FXD FLM 511 OHM 2% 1/8W	28480	0698-7229
A2R34	0698-7229		R:FXD FLM 511 OHM 2% 1/8W	28480	0698-7229
A2R35	0698-7229		R:FXD FLM 511 OHM 2% 1/8W	28480	0698-7229
A2R36	0698-7229		R:FXD FLM 511 OHM 2% 1/8W	28480	0698-7229
A2R37	0698-7229		R:FXD FLM 511 OHM 2% 1/8W	28480	0698-7229
A2R38	0698-7225		R:FXD FLM 348 OHM 2% 1/8W	28480	0698-7225

Table 2-3. A2 ROM Control Card, Replaceable Parts (Continued)

Reference Designation	HP Part Number	Qty	Description	Mfr Code	Mfr Part Number
A2R39	0698-7225		R:FXD FLM 348 OHM 2% 1/8W	28480	0698-7225
A2R40	0698-7225		R:FXD FLM 348 OHM 2% 1/8W	28480	0698-7225
A2R41	0698-7225		R:FXD FLM 348 OHM 2% 1/8W	28480	0698-7225
A2R42	0698-7225		R:FXD FLM 348 OHM 2% 1/8W	28480	0698-7225
A2R43	0698-7225		R:FXD FLM 348 OHM 2% 1/8W	28480	0698-7225
A2R44	0698-7225		R:FXD FLM 348 OHM 2% 1/8W	28480	0698-7225
A2R45	0698-7225		R:FXD FLM 348 OHM 2% 1/8W	28480	0698-7225
A2R46	0698-7229		R:FXD FLM 511 OHM 2% 1/8W	28480	0698-7229
A2R47	0698-7236		R:FXD FLM 1K OHM 2% 1/8W	28480	0698-7236
A2R48	0698-7225		R:FXD FLM 348 OHM 2% 1/8W	28480	0698-7225
A2R49	0698-7229		R:FXD FLM 511 OHM 2% 1/8W	28480	0698-7229
A2R50	0698-7225		R:FXD FLM 348 OHM 2% 1/8W	28480	0698-7225
A2R51	0698-7229		R:FXD FLM 511 OHM 2% 1/8W	28480	0698-7229
A2R52	0698-7229		R:FXD FLM 511 OHM 2% 1/8W	28480	0698-7229
A2R53	0698-7236		R:FXD FLM 1K OHM 2% 1/8W	28480	0698-7236
A2R54	0698-7229		R:FXD FLM 511 OHM 2% 1/8W	28480	0698-7229
A2R55	0698-7220	1	R:FXD FLM 215 OHM 2% 1/8W	28480	0698-7220
A2R56	0698-7229		R:FXD FLM 511 OHM 2% 1/8W	28480	0698-7229
A2R57	0698-7225		R:FXD FLM 348 OHM 2% 1/8W	28480	0698-7225
A2R58	0698-7229		R:FXD FLM 511 OHM 2% 1/8W	28480	0698-7229
A2R59	C698-7234	1	R:FXD FLM 825 OHM 2% 1/8W	28480	0698-7234
A2R60	0698-7229		R:FXD FLM 511 OHM 2% 1/8W	28480	0698-7229
A2R61	0698-7229		R:FXD FLM 511 OHM 2% 1/8W	28480	0698-7229
A2R62	0698-7229		R:FXD FLM 511 OHM 2% 1/8W	28480	0698-7229
A2R63	0698-7229		R:FXD FLM 511 OHM 2% 1/8W	28480	0698-7229
A2R64	0698-7221	2	R:FXD FLM 237 OHM 2% 1/8W	28480	0698-7221
A2R65	0698-7221		R:FXD FLM 237 OHM 2% 1/8W	28480	0698-7221
A2R66	0698-7216	1	R:FXD MET FLM 147 OHM 2% 1/8W	28480	0698-7216
A2R67	0698-7225		R:FXD FLM 348 OHM 2% 1/8W	28480	0698-7225
A2R68	0698-7229		R:FXD FLM 511 OHM 2% 1/8W	28480	0698-7229
A2R69	0698-7222	3	R:FXD FLM 261 OHM 2% 1/8W	28480	0698-7222
A2R70	0698-7222		R:FXD FLM 261 OHM 2% 1/8W	28480	0698-7222
A2R71	0698-7222		R:FXD FLM 261 OHM 2% 1/8W	28480	0698-7222
A2R72	0698-7226		R:FXD FLM 383 OHM 2% 1/8W	28480	0698-7226
A2R73(NOTE 1)	0698-7236		R:FXD FLM 1K OHM 2% 1/8W	28480	0698-7236
A2U13	1820-0971	4	IC:CTL DUAL 2W-2-INPT AND/OR GATE	07263	U6A997179X
A2U14	1820-0966	12	IC:CTL DUAL 2-INPT AND 2W AND/OR GATE	14433	MIC 966
A2U15	1816-2062	1	IC:ROM # 062	28480	1816-2062
A2U16	1816-2065	1	IC:ROM # 065	28480	1816-2065
A2U17	1816-2064	1	IC:ROM # 064	28480	1816-2064
A2U23	1820-0971		IC:CTL DUAL 2W-2-INPT AND/OR GATE	07263	U6A997179X
A2U24	1820-0966		IC:CTL DUAL 2-INPT AND 2W AND/OR GATE	14433	MIC 966
A2U25(NOTE 2)	1816-0056	1	IC:ROM 4 X 256	28480	1816-0056
A2U26(NOTE 2)	1816-0059	1	IC:ROM 4 X 256	28480	1816-0059
A2U27(NOTE 2)	1816-0058	1	IC:ROM 4 X 256	28480	1816-0058
A2U31	1820-0953	4	IC:CTL TRIPLE 2-2-3 INPT AND GATE	14433	MIC 953
A2U32	1820-0231	3	IC:TTL 4-BIT SYNC BINARY COUNTER	07263	U6B931659X
A2U34	1820-0966		IC:CTL DUAL 2-INPT AND 2W AND/OR GATE	14433	MIC 966
A2U35(NOTE 2)	1816-0055	1	IC:ROM 4 X 256	28480	1816-0055
A2U36	1820-0437	2	IC:TTL QUAD D F/F	04713	MC4015P
A2U37(NOTE 2)	1816-0054	1	IC:ROM 4 X 256	28480	1816-0054
A2U41	1820-0379	4	IC:TTL HS 4W 2-2-2-3 INPT AND/OR GATE	01295	SN74H52N
A2U42	1820-0301	3	IC:TTL QUAD BI-STABLE D-LATCH	01295	SN7475N
A2U44	1820-0966		IC:CTL DUAL 2-INPT AND 2W AND/OR GATE	14433	MIC 966
A2U45	1816-2061	1	IC:ROM # 061	28480	1816-2061
A2U46	1820-0437		IC:TTL QUAD D F/F	04713	MC4015P
A2U47	1816-2060	1	IC:ROM # 060	28480	1816-2060
A2U51	1820-0379		IC:TTL HS 4W 2-2-2-3 INPT AND/OR GATE	01295	SN74H52N
A2U52	1820-0231		IC:TTL 4-BIT SYNC BINARY COUNTER	07263	U6B931659X
A2U53	1820-0231		IC:TTL 4-BIT SYNC BINARY COUNTER	07263	U6B931659X
A2U54	1820-0301		IC:TTL QUAD BI-STABLE D-LATCH	01295	SN7475N
A2U55	1816-2063	1	IC:ROM # 063	28480	1816-2063
A2U56	1820-0376	1	IC:TTL DUAL 4-INPT NAND POWER GATE	01295	SN74H74N
A2U57	1820-0374	1	IC:TTL HS DUAL 4-INPT AND GATE	01295	SN74H21N
A2U61	1820-0379		IC:TTL HS 4W 2-2-2-3 INPT AND/OR GATE	01295	SN74H52N
A2U62	1820-0301		IC:TTL QUAD BI-STABLE D-LATCH	01295	SN7475N
A2U63	1820-0966		IC:CTL DUAL 2-INPT AND 2W AND/OR GATE	14433	MIC 966
A2U64	1820-0966		IC:CTL DUAL 2-INPT AND 2W AND/OR GATE	14433	MIC 966
A2U65(NOTE 2)	1816-0057	1	IC:ROM 4 X 256	28480	1816-0057
A2U66	1820-0966		IC:CTL DUAL 2-INPT AND 2W AND/OR GATE	14433	MIC 966
A2U67	1820-0971		IC:CTL DUAL 2W-2-INPT AND/OR GATE	07263	U6A997179X
A2U71	1820-0379		IC:TTL HS 4W 2-2-2-3 INPT AND/OR GATE	01295	SN74H52N
A2U72	1820-0966		IC:CTL DUAL 2-INPT AND 2W AND/OR GATE	14433	MIC 966
A2U73	1820-0966		IC:CTL DUAL 2-INPT AND 2W AND/OR GATE	14433	MIC 966
A2U74	1820-0971		IC:CTL DUAL 2W-2-INPT AND/OR GATE	07263	U6A997179X

NOTES: 1. First used on card rev. 1144.
2. Used only on cards having floating-point capability.

Table 2-3. A2 ROM Control Card, Replaceable Parts (Continued)

Reference Designation	HP Part Number	Qty	Description	Mfr Code	Mfr Part Number
A2U75	1820-0966		IC:CTL DUAL 2-INPT AND 2W AND/OR GATE	14433	MIC 966
A2U76	1820-0966		IC:CTL DUAL 2-INPT AND 2W AND/OR GATE	14433	MIC 966
A2U77	1820-0186	4	IC:CTL DUAL 2-INPT AND GATE	07263	U6A985649X
A2U81	1820-0141	2	IC:TTL QUAD 2-INPT AND GATE	04713	MC3001P
A2U82	1820-0370	2	IC:TTL HS QUAD 2-INPT NAND GATE	01295	SN74H00N
A2U83	1820-0965	2	IC:CTL QUAD 1-INPT AND GATE	07263	U6A996579X
A2U84	1820-0186		IC:CTL DUAL 2-INPT AND GATE	07263	U6A985649X
A2U85	1820-0424	1	IC:TTL HS HEX INVERTER	04713	SN74H04N
A2U86	1820-0141		IC:TTL QUAD 2-INPT AND GATE	04713	MC3001P
A2U87	1820-0370		IC:TTL HS QUAD 2-INPT NAND GATE	01295	SN74H00N
A2U91	1820-0186		IC:CTL DUAL 2-INPT AND GATE	07263	U6A985649X
A2U92	1820-0371	1	IC:TTL HS TRIPLE 3-INPT NAND GATE	01295	SN74H10N
A2U93	1820-0953		IC:CTL TRIPLE 2-2-3 INPT AND GATE	14433	MIC 953
A2U94	1820-0965		IC:CTL QUAD 1-INPT AND GATE	07263	U6A996579X
A2U95	1820-0966		IC:CTL DUAL 2-INPT AND 2W AND/OR GATE	14433	MIC 966
A2U96	1820-0372	1	IC:TTL TRIPLE 3-INPT AND GATE	28480	1820-0372
A2U97	1820-0186		IC:CTL DUAL 2-INPT AND GATE	07263	U6A985649X
A2U101	1820-0953		IC:CTL TRIPLE 2-2-3 INPT AND GATE	14433	MIC 953
A2U102	1820-0953		IC:CTL TRIPLE 2-2-3 INPT AND GATE	14433	MIC 953
A2U103	1820-0954	1	IC:CTL DUAL 4-INPT AND GATE	07263	U6A995479X
A2U104	1820-0239	1	IC:TTL QUAD 2-INPT NOR GATE	28480	1820-0239
A2U105	1820-0485	1	IC:CTL HEX LEVEL RESTORER	07263	U6B981649X
A2U106(NOTE 3)	1820-0451	1	IC:TTL DUAL J-K F/F	04713	MC3062P
A2U107	1820-0187	1	IC:CTL DUAL 2-INPT NOR GATE	07263	U6A985249X
A2W1	8159-0005	5	JUMPER WIRE	28480	8159-0005
A2W2	8159-0005		JUMPER WIRE	28480	8159-0005
A2W3	8159-0005		JUMPER WIRE	28480	8159-0005
A2W4	8159-0005		JUMPER WIRE	28480	8159-0005
A2W6	8159-0005		JUMPER WIRE	28480	8159-0005
A2XU25 (NOTE 4)	1200-0767	6	SOCKET:IC 16 CONTACT DUAL LINE	91506	316AG5D-3R
A2XU26 (NOTE 4)	1200-0767		SOCKET:IC 16 CONTACT DUAL LINE	91506	316AG5D-3R
A2XU27 (NOTE 4)	1200-0767		SOCKET:IC 16 CONTACT DUAL LINE	91506	316AG5D-3R
A2XU35 (NOTE 4)	1200-0767		SOCKET:IC 16 CONTACT DUAL LINE	91506	316AG5D-3R
A2XU37 (NOTE 4)	1200-0767		SOCKET:IC 16 CONTACT DUAL LINE	91506	316AG5D-3R
A2XU65 (NOTE 4)	1200-0767		SOCKET:IC 16 CONTACT DUAL LINE	91506	316AG5D-3R
(NOTE 5)	0340-0788	6	INSULATOR:IC SOCKET	91506	316-6PI

NOTES: 3. Part no. 1820-0695 used on some cards; the two parts are interchangeable.
4. Used only on cards having floating-point capability.
5. One 0340-0788 insulator is used with each 1200-0767 socket.

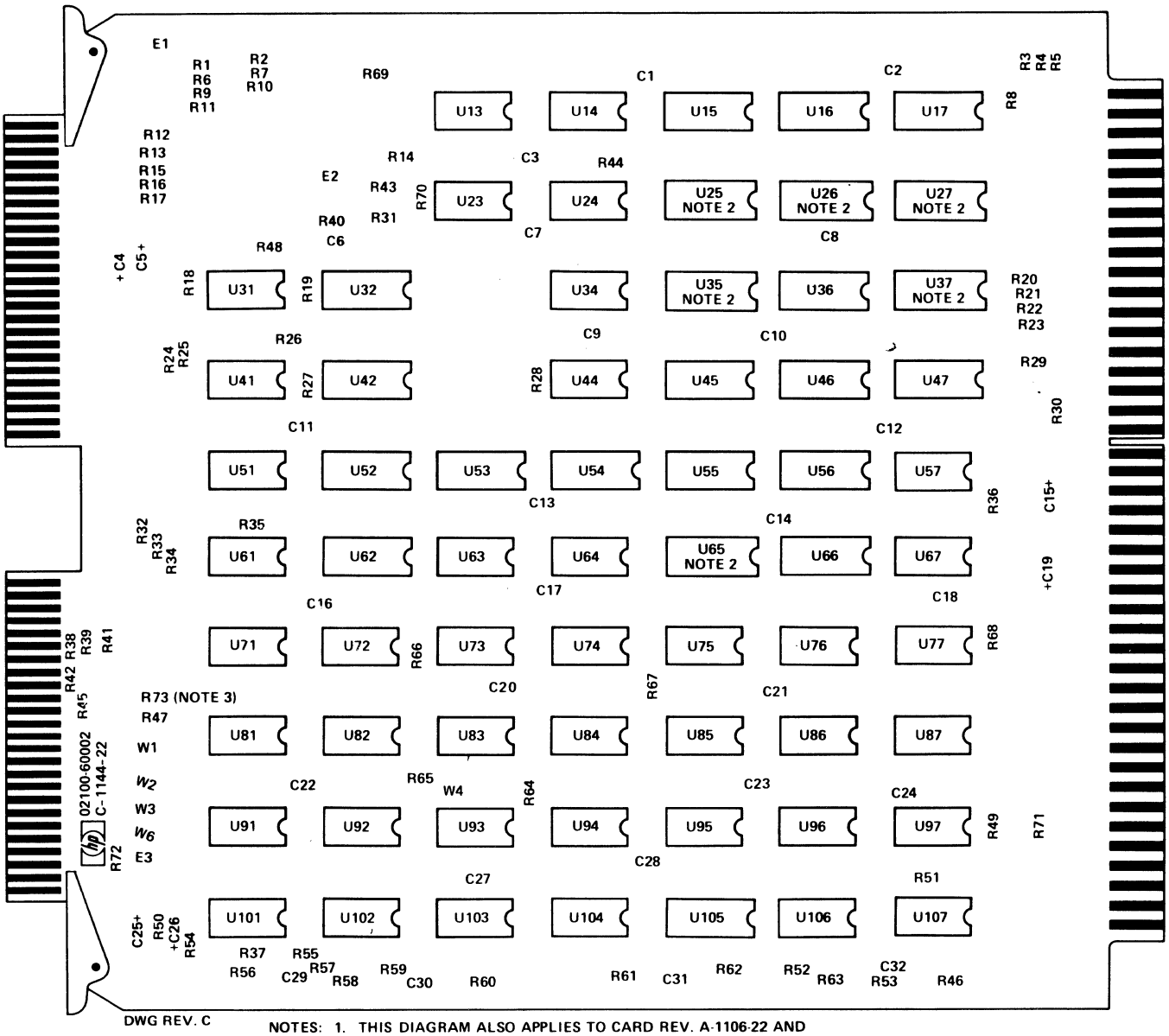

NOTES: 1. THIS DIAGRAM ALSO APPLIES TO CARD REV. A-1106-22 AND B-1132-22.

2. U25, U26, U27, U35, U37, AND U65 USED ONLY FOR OPTIONS SUCH AS FLOATING - POINT CAPABILITY.

3. R73 FIRST USED ON CARD REV. C-1144-22.

Figure 2-3. A2 ROM Control Card, Parts Location Diagram

Table 2-4. A3 Microinstruction Decoder 1 Card, Replaceable Parts

Reference Designation	HP Part Number	Qty	Description	Mfr Code	Mfr Part Number
A3	02100-60004	1	MICRO INSTRUCTION DECODER 1 CARD	28480	02100-60004
A3C1	0180-0197	12	C:FXD ELECT 2.2 UF 10% 20VDCW	56289	150D225X9020A2-DYS
A3C2	0160-2055	24	C:FXD CER 0.01 UF +80-20% 100VDCW	56289	C023F101F103ZS22-CDH
A3C3	0180-0197		C:FXD ELECT 2.2 UF 10% 20VDCW	56289	150D225X9020A2-DYS
A3C4	0180-0197		C:FXD ELECT 2.2 UF 10% 20VDCW	56289	150D225X9020A2-DYS
A3C5	0160-2055		C:FXD CER 0.01 UF +80-20% 100VDCW	56289	C023F101F103ZS22-CDH
A3C6	0180-0197		C:FXD ELECT 2.2 UF 10% 20VDCW	56289	150D225X9020A2-DYS
A3C7	0160-2055		C:FXD CER 0.01 UF +80-20% 100VDCW	56289	C023F101F103ZS22-CDH
A3C8	0160-2055		C:FXD CER 0.01 UF +80-20% 100VDCW	56289	C023F101F103ZS22-CDH
A3C9	0160-2055		C:FXD CER 0.01 UF +80-20% 100VDCW	56289	C023F101F103ZS22-CDH
A3C10	0160-2055		C:FXD CER 0.01 UF +80-20% 100VDCW	56289	C023F101F103ZS22-CDH
A3C11	0160-2055		C:FXD CER 0.01 UF +80-20% 100VDCW	56289	C023F101F103ZS22-CDH
A3C12	0160-2055		C:FXD CER 0.01 UF +80-20% 100VDCW	56289	C023F101F103ZS22-CDH
A3C13	0180-0197		C:FXD ELECT 2.2 UF 10% 20VDCW	56289	150D225X9020A2-DYS
A3C14	0160-2055		C:FXD CER 0.01 UF +80-20% 100VDCW	56289	C023F101F103ZS22-CDH
A3C15	0160-2055		C:FXD CER 0.01 UF +80-20% 100VDCW	56289	C023F101F103ZS22-CDH
A3C16	0160-2055		C:FXD CER 0.01 UF +80-20% 100VDCW	56289	C023F101F103ZS22-CDH
A3C17	0180-0197		C:FXD ELECT 2.2 UF 10% 20VDCW	56289	150D225X9020A2-DYS
A3C18	0180-0197		C:FXD ELECT 2.2 UF 10% 20VDCW	56289	150D225X9020A2-DYS
A3C19	0160-2055		C:FXD CER 0.01 UF +80-20% 100VDCW	56289	C023F101F103ZS22-CDH
A3C20	0160-2055		C:FXD CER 0.01 UF +80-20% 100VDCW	56289	C023F101F103ZS22-CDH
A3C21	0160-2055		C:FXD CER 0.01 UF +80-20% 100VDCW	56289	C023F101F103ZS22-CDH
A3C22	0180-0197		C:FXD ELECT 2.2 UF 10% 20VDCW	56289	150D225X9020A2-DYS
A3C23	0160-2055		C:FXD CER 0.01 UF +80-20% 100VDCW	56289	C023F101F103ZS22-CDH
A3C24	0160-2055		C:FXD CER 0.01 UF +80-20% 100VDCW	56289	C023F101F103ZS22-CDH
A3C25	0160-2055		C:FXD CER 0.01 UF +80-20% 100VDCW	56289	C023F101F103ZS22-CDH
A3C26	0160-2055		C:FXD CER 0.01 UF +80-20% 100VDCW	56289	C023F101F103ZS22-CDH
A3C27	0160-2207	1	C:FXD MICA 300 PF 5%	28480	0160-2207
A3C28	0180-0197		C:FXD ELECT 2.2 UF 10% 20VDCW	56289	150D225X9020A2-DYS
A3C29	0180-0197		C:FXD ELECT 2.2 UF 10% 20VDCW	56289	150D225X9020A2-DYS
A3C30	0160-2055		C:FXD CER 0.01 UF +80-20% 100VDCW	56289	C023F101F103ZS22-CDH
A3C31	0160-2055		C:FXD CER 0.01 UF +80-20% 100VDCW	56289	C023F101F103ZS22-CDH
A3C32	0160-2055		C:FXD CER 0.01 UF +80-20% 100VDCW	56289	C023F101F103ZS22-CDH
A3C33	0160-2055		C:FXD CER 0.01 UF +80-20% 100VDCW	56289	C023F101F103ZS22-CDH
A3C34	0160-2055		C:FXD CER 0.01 UF +80-20% 100VDCW	56289	C023F101F103ZS22-CDH
A3C35	0160-2055		C:FXD CER 0.01 UF +80-20% 100VDCW	56289	C023F101F103ZS22-CDH
A3C36	0180-0197		C:FXD ELECT 2.2 UF 10% 20VDCW	56289	150D225X9020A2-DYS
A3C37	0180-0197		C:FXD ELECT 2.2 UF 10% 20VDCW	56289	150D225X9020A2-DYS
A3E1 THRU A3E6	0360-0294	6	TERMINAL:SOLDER POINT	28480	0360-0294
A3R1	0757-0416	16	R:FXD MET FLM 511 OHM 1% 1/8W	28480	0757-0416
A3R2	0757-0416		R:FXD MET FLM 511 OHM 1% 1/8W	28480	0757-0416
A3R3	0698-0082	2	R:FXD MET FLM 464 OHM 1% 1/8W	28480	0698-0082
A3R4	0757-0416		R:FXD MET FLM 511 OHM 1% 1/8W	28480	0757-0416
A3R5	0757-0416		R:FXD MET FLM 511 OHM 1% 1/8W	28480	0757-0416
A3R6	0757-0280	4	R:FXD MET FLM 1K OHM 1% 1/8W	28480	0757-0280
A3R7	0757-0416		R:FXD MET FLM 511 OHM 1% 1/8W	28480	0757-0416
A3R8	0698-3444	2	R:FXD MET FLM 316 OHM 1% 1/8W	28480	0698-3444
A3R9	0757-0420	1	R:FXD MET FLM 750 OHM 1% 1/8W	28480	0757-0420
A3R10	0698-3446	4	R:FXD MET FLM 383 OHM 1% 1/8W	28480	0698-3446
A3R11	0757-0416		R:FXD MET FLM 511 OHM 1% 1/8W	28480	0757-0416
A3R12	0757-0416		R:FXD MET FLM 511 OHM 1% 1/8W	28480	0757-0416
A3R13	0698-3445	4	R:FXD MET FLM 348 OHM 1% 1/8W	28480	0698-3445
A3R14	0757-0416		R:FXD MET FLM 511 OHM 1% 1/8W	28480	0757-0416
A3R15	0757-0416		R:FXD MET FLM 511 OHM 1% 1/8W	28480	0757-0416
A3R16	0698-3132	4	R:FXD FLM 261 OHM 1% 1/8W	28480	0698-3132
A3R17	0698-3132		R:FXD FLM 261 OHM 1% 1/8W	28480	0698-3132
A3R18	0698-3132		R:FXD FLM 261 OHM 1% 1/8W	28480	0698-3132
A3R19	0698-3446		R:FXD MET FLM 383 OHM 1% 1/8W	28480	0698-3446
A3R20	0698-3132		R:FXD FLM 261 OHM 1% 1/8W	28480	0698-3132
A3R21	0757-0416		R:FXD MET FLM 511 OHM 1% 1/8W	28480	0757-0416
A3R22	0698-3446		R:FXD MET FLM 383 OHM 1% 1/8W	28480	0698-3446
A3R23	0698-3444		R:FXD MET FLM 316 OHM 1% 1/8W	28480	0698-3444
A3R24	0757-0416		R:FXD MET FLM 511 OHM 1% 1/8W	28480	0757-0416
A3R25	0757-0416		R:FXD MET FLM 511 OHM 1% 1/8W	28480	0757-0416
A3R26	0757-0280		R:FXD MET FLM 1K OHM 1% 1/8W	28480	0757-0280
A3R27	0757-0416		R:FXD MET FLM 511 OHM 1% 1/8W	28480	0757-0416
A3R29	0698-0082		R:FXD MET FLM 464 OHM 1% 1/8W	28480	0698-0082
A3R30	0757-0280		R:FXD MET FLM 1K OHM 1% 1/8W	28480	0757-0280
A3R31	0757-0416		R:FXD MET FLM 511 OHM 1% 1/8W	28480	0757-0416
A3R32	0757-0427	4	R:FXD MET FLM 1.5K OHM 1% 1/8W	28480	0757-0427
A3R33	0757-0403	4	R:FXD MET FLM 121 OHM 1% 1/8W	28480	0757-0403
A3R34	0757-0403		R:FXD MET FLM 121 OHM 1% 1/8W	28480	0757-0403
A3R35	0698-3446		R:FXD MET FLM 383 OHM 1% 1/8W	28480	0698-3446

Table 2-4. A3 Microinstruction Decoder 1 Card, Replaceable Parts (Continued)

Reference Designation	HP Part Number	Qty	Description	Mfr Code	Mfr Part Number
A3R36	0698-3442	4	R:FXD MET FLM 237 OHM 1% 1/8W	28480	0698-3442
A3R37	0698-3442		R:FXD MET FLM 237 OHM 1% 1/8W	28480	0698-3442
A3R38	0757-0401	2	R:FXD MET FLM 100 OHM 1% 1/8W	28480	0757-0401
A3R39	0757-0416		R:FXD MET FLM 511 OHM 1% 1/8W	28480	0757-0416
A3R40	0698-3445		R:FXD MET FLM 348 OHM 1% 1/8W	28480	0698-3445
A3R41	0757-0403		R:FXD MET FLM 121 OHM 1% 1/8W	28480	0757-0403
A3R42	0757-0403		R:FXD MET FLM 121 OHM 1% 1/8W	28480	0757-0403
A3R43	0757-0401		R:FXD MET FLM 100 OHM 1% 1/8W	28480	0757-0401
A3R44	0698-3445		R:FXD MET FLM 348 OHM 1% 1/8W	28480	0698-3445
A3R45	0757-0427		R:FXD MET FLM 1.5K OHM 1% 1/8W	28480	0757-0427
A3R46	0757-0427		R:FXD MET FLM 1.5K OHM 1% 1/8W	28480	0757-0427
A3R47	0757-0427		R:FXD MET FLM 1.5K OHM 1% 1/8W	28480	0757-0427
A3R48	0757-0280		R:FXD MET FLM 1K OHM 1% 1/8W	28480	0757-0280
A3R49	0757-0416		R:FXD MET FLM 511 OHM 1% 1/8W	28480	0757-0416
A3R50	0698-3445		R:FXD MET FLM 348 OHM 1% 1/8W	28480	0698-3445
A3R51	0698-3442		R:FXD MET FLM 237 OHM 1% 1/8W	28480	0698-3442
A3R52	0698-3442		R:FXD MET FLM 237 OHM 1% 1/8W	28480	0698-3442
A3U11(NOTE 1)	1820-0372	1	IC:TTL TRIPLE 3-INPT AND GATE	28480	1820-0372
A3U11(NOTE 2)	1820-0686	1	IC:TTL SCHOTTKY TRIPLE 3-INPT AND GATE	01295	SN74S11N
A3U12	1820-0485	3	IC:CTL HEX LEVEL RESTORER	07263	U6B981649X
A3U14	1820-0512	3	IC:TTL DUAL D F/F	01295	SN74H74N
A3U21	1820-0966	1	IC:CTL DUAL 2-INPT AND 2W AND/OR GATE	14433	MIC 966
A3U23	1820-0953	1	IC:CTL TRIPLE 2-2-3 INPT AND GATE	14433	MIC 953
A3U24	1820-0512		IC:TTL DUAL D F/F	01295	SN74H74N
A3U25	1820-0482	2	IC:CTL 1 OF 8 DECODER	07263	U6B983849X
A3U26	1820-0482		IC:CTL 1 OF 8 DECODER	07263	U6B983849X
A3U33	1820-0955	1	IC:CTL 8-INPT DUAL OUTPUT AND GATE	07263	U6A995579X
A3U34	1820-0965		IC:CTL QUAD 1-INPT AND GATE	07263	U6A996579X
A3U35	1820-0485		IC:CTL HEX LEVEL RESTORER	07263	U6B981649X
A3U36	1820-0485		IC:CTL HEX LEVEL RESTORER	07263	U6B981649X
A3U37	1820-0186	10	IC:CTL DUAL 2-INPT AND GATE	07263	U6A985649X
A3U42	1820-0424	3	IC:TTL HS HEX INVERTER	04713	SN74H04N
A3U43	1820-0383	1	IC:TTL HS DUAL 4-INPT EXPANDER	01295	SN74H60N
A3U44	1820-0380	1	IC:TTL HS 4W 2-2-2-3 INPT AND/OR INV	01295	SN74H53N
A3U45	1820-0186		IC:CTL DUAL 2-INPT AND GATE	07263	U6A985649X
A3U46	1820-0186		IC:CTL DUAL 2-INPT AND GATE	07263	U6A985649X
A3U53	1820-0512		IC:TTL DUAL D F/F	01295	SN74H74N
A3U54	1820-0370	4	IC:TTL HS QUAD 2-INPT NAND GATE	01295	SN74H00N
A3U55(NOTE 3)	1820-0451	1	IC:TTL DUAL J-K F/F	04713	MC3062P
A3U56	1820-0141	4	IC:TTL QUAD 2-INPT AND GATE	04713	MC3001P
A3U63	1820-0370		IC:TTL HS QUAD 2-INPT NAND GATE	01295	SN74H00N
A3U64	1820-0186		IC:CTL DUAL 2-INPT AND GATE	07263	U6A985649X
A3U66	1820-0186		IC:CTL DUAL 2-INPT AND GATE	07263	U6A985649X
A3U72	1820-0205	2	IC:TTL QUAD 2-INPT OR GATE	28480	1820-0205
A3U73	1820-0437	1	IC:TTL QUAD D F/F	04713	MC4015P
A3U74	1820-0370		IC:TTL HS QUAD 2-INPT NAND GATE	01295	SN74H00N
A3U75	1820-0186		IC:CTL DUAL 2-INPT AND GATE	07263	U6A985649X
A3U76	1820-0186		IC:CTL DUAL 2-INPT AND GATE	07263	U6A985649X
A3U82	1820-0205		IC:TTL QUAD 2-INPT OR GATE	28480	1820-0205
A3U83	1820-0608	2	IC:TTL 1 OF DECODER W/ENABLE	04713	MC4006P
A3U84	1820-0141		IC:TTL QUAD 2-INPT AND GATE	04713	MC3001P
A3U85	1820-0186		IC:CTL DUAL 2-INPT AND GATE	07263	U6A985649X
A3U86	1820-0186		IC:CTL DUAL 2-INPT AND GATE	07263	U6A985649X
A3U87	1820-0141		IC:TTL QUAD 2-INPT AND GATE	04713	MC3001P
A3U92	1820-0376	2	IC:TTL DUAL 4-INPT NAND POWER GATE	01295	SN74H40N
A3U93	1820-0608		IC:TTL 1 OF DECODER W/ENABLE	04713	MC4006P
A3U96	1820-0186		IC:CTL DUAL 2-INPT AND GATE	07263	U6A985649X
A3U102(NOTE 1)	1820-0424		IC:TTL HS HEX INVERTER	04713	SN74H04N
A3U102(NOTE 2)	1820-0683	1	IC:TTL HS HEX INVERTER	04713	SN74S04N
A3U103	1820-0424		IC:TTL HS HEX INVERTER	04713	SN74H04N
A3U104	1820-0376		IC:TTL DUAL 4-INPT NAND POWER GATE	01295	SN74H40N
A3U105	1820-0370		IC:TTL HS QUAD 2-INPT NAND GATE	01295	SN74H00N
A3U106	1820-0141		IC:TTL QUAD 2-INPT AND GATE	04713	MC3001P
A3U107	1820-0371	1	IC:TTL HS TRIPLE 3-INPT NAND GATE	01295	SN74H10N

NOTES: 1. Used on card rev. 1124 only.
2. First used on card rev. 1144.
3. Part no. 1820-0695 used on some cards; the two parts are interchangeable.

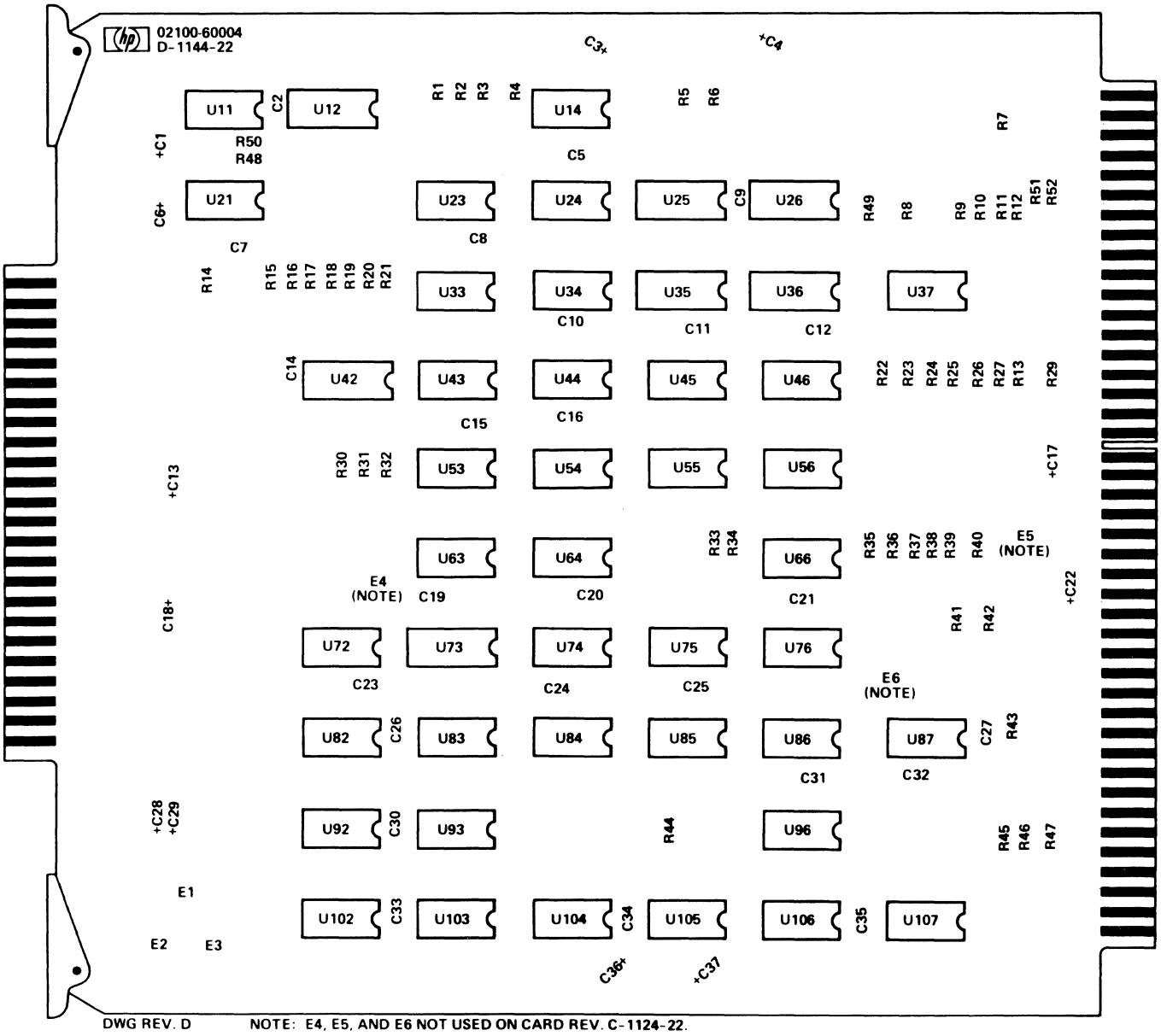

Figure 2-4. A3 Microinstruction Decoder 1 Card, Parts Location Diagram

Table 2-5. A4 Microinstruction Decoder 2 Card, Replaceable Parts

Reference Designation	HP Part Number	Qty	Description	Mfr Code	Mfr Part Number
A4	02100-60022	1	MICRO INSTRUCTION DECODER 2 CARD	28480	02100-60022
A4C1	0180-0197	10	C:FXD ELECT 2.2 UF 10% 20VDCW	56289	150D225X9020A2-DYS
A4C2	0180-0197		C:FXD ELECT 2.2 UF 10% 20VDCW	56289	150D225X9020A2-DYS
A4C3	0160-2055	20	C:FXD CER 0.01 UF +80-20% 100VDCW	56289	C023F101F103ZS22-CDH
A4C4	0180-0197		C:FXD ELECT 2.2 UF 10% 20VDCW	56289	150D225X9020A2-DYS
A4C5	0180-0197		C:FXD ELECT 2.2 UF 10% 20VDCW	56289	150D225X9020A2-DYS
A4C6	0160-2055		C:FXD CER 0.01 UF +80-20% 100VDCW	56289	C023F101F103ZS22-CDH
A4C7	0160-2055		C:FXD CER 0.01 UF +80-20% 100VDCW	56289	C023F101F103ZS22-CDH
A4C8	0160-2055		C:FXD CER 0.01 UF +80-20% 100VDCW	56289	C023F101F103ZS22-CDH
A4C9	0160-2055		C:FXD CER 0.01 UF +80-20% 100VDCW	56289	C023F101F103ZS22-CDH
A4C10	0160-2055		C:FXD CER 0.01 UF +80-20% 100VDCW	56289	C023F101F103ZS22-CDH
A4C11	0160-2055		C:FXD CER 0.01 UF +80-20% 100VDCW	56289	C023F101F103ZS22-CDH
A4C12	0160-2055		C:FXD CER 0.01 UF +80-20% 100VDCW	56289	C023F101F103ZS22-CDH
A4C13	0160-2055		C:FXD CER 0.01 UF +80-20% 100VDCW	56289	C023F101F103ZS22-CDH
A4C14	0160-2055		C:FXD CER 0.01 UF +80-20% 100VDCW	56289	C023F101F103ZS22-CDH
A4C15	0180-0197		C:FXD ELECT 2.2 UF 10% 20VDCW	56289	150D225X9020A2-DYS
A4C16	0180-0197		C:FXD ELECT 2.2 UF 10% 20VDCW	56289	150D225X9020A2-DYS
A4C17	0160-2055		C:FXD CER 0.01 UF +80-20% 100VDCW	56289	C023F101F103ZS22-CDH
A4C18	0160-2055		C:FXD CER 0.01 UF +80-20% 100VDCW	56289	C023F101F103ZS22-CDH
A4C19	0160-2055		C:FXD CER 0.01 UF +80-20% 100VDCW	56289	C023F101F103ZS22-CDH
A4C20	0160-2055		C:FXD CER 0.01 UF +80-20% 100VDCW	56289	C023F101F103ZS22-CDH
A4C21	0160-2055		C:FXD CER 0.01 UF +80-20% 100VDCW	56289	C023F101F103ZS22-CDH
A4C22	0160-2055		C:FXD CER 0.01 UF +80-20% 100VDCW	56289	C023F101F103ZS22-CDH
A4C23	0160-2055		C:FXD CER 0.01 UF +80-20% 100VDCW	56289	C023F101F103ZS22-CDH
A4C24	0160-2055		C:FXD CER 0.01 UF +80-20% 100VDCW	56289	C023F101F103ZS22-CDH
A4C25	0160-2055		C:FXD CER 0.01 UF +80-20% 100VDCW	56289	C023F101F103ZS22-CDH
A4C26	0180-0197		C:FXD ELECT 2.2 UF 10% 20VDCW	56289	150D225X9020A2-DYS
A4C27	0180-0197		C:FXD ELECT 2.2 UF 10% 20VDCW	56289	150D225X9020A2-DYS
A4C28	0160-2055		C:FXD CER 0.01 UF +80-20% 100VDCW	56289	C023F101F103ZS22-CDH
A4C29	0180-0197		C:FXD ELECT 2.2 UF 10% 20VDCW	56289	150D225X9020A2-DYS
A4C30	0180-0197		C:FXD ELECT 2.2 UF 10% 20VDCW	56289	150D225X9020A2-DYS
A4E1	0360-0294	3	TERMINAL:SOLDER POINT	28480	0360-0294
A4E2	0360-0294		TERMINAL:SOLDER POINT	28480	0360-0294
A4E3	0360-0294		TERMINAL:SOLDER POINT	28480	0360-0294
A4R1	0757-0427	9	R:FXD MET FLM 1.5K OHM 1% 1/8W	28480	0757-0427
A4R2	0757-0280	5	R:FXD MET FLM 1K OHM 1% 1/8W	28480	0757-0280
A4R3	0757-0280		R:FXD MET FLM 1K OHM 1% 1/8W	28480	0757-0280
A4R4	0757-0416	6	R:FXD MET FLM 511 OHM 1% 1/8W	28480	0757-0416
A4R5	0757-0416		R:FXD MET FLM 511 OHM 1% 1/8W	28480	0757-0416
A4R6	0757-0274	1	R:FXD MET FLM 1.21K OHM 1% 1/8W	28480	0757-0274
A4R7	0698-3443	2	R:FXD MET FLM 287 OHM 1% 1/8W	28480	0698-3443
A4R8	0757-0416		R:FXD MET FLM 511 OHM 1% 1/8W	28480	0757-0416
A4R9	0757-0284	2	R:FXD MET FLM 150 OHM 1% 1/8W	28480	0757-0284
A4R10	0757-0284		R:FXD MET FLM 150 OHM 1% 1/8W	28480	0757-0284
A4R11	0757-0399	1	R:FXD MET FLM 82.5 OHM 1% 1/8W	28480	0757-0399
A4R12	0757-0416		R:FXD MET FLM 511 OHM 1% 1/8W	28480	0757-0416
A4R13	0757-0280		R:FXD MET FLM 1K OHM 1% 1/8W	28480	0757-0280
A4R14	0757-0427		R:FXD MET FLM 1.5K OHM 1% 1/8W	28480	0757-0427
A4R15	0757-0420	1	R:FXD MET FLM 750 OHM 1% 1/8W	28480	0757-0420
A4R16	0757-0416		R:FXD MET FLM 511 OHM 1% 1/8W	28480	0757-0416
A4R17	0757-0280		R:FXD MET FLM 1K OHM 1% 1/8W	28480	0757-0280
A4R18	0757-0416		R:FXD FLM 511 OHM 1% 1/8W	28480	0757-0416
A4R20	0698-3443		R:FXD FLM 287 OHM 1%1/8W	28480	0698-3443
A4R21	0757-0280		R:FXD MET FLM 1K OHM 1% 1/8W	28480	0757-0280
A4R22	0757-0427		R:FXD MET FLM 1.5K OHM 1% 1/8W	28480	0757-0427
A4R23	0698-3445	1	R:FXD MET FLM 348 OHM 1% 1/8W	28480	0698-3445
A4R24	0757-0427		R:FXD MET FLM 1.5K OHM 1% 1/8W	28480	0757-0427
A4R25	0757-0427		R:FXD MET FLM 1.5K OHM 1% 1/8W	28480	0757-0427
A4R26	0757-0427		R:FXD MET FLM 1.5K OHM 1% 1/8W	28480	0757-0427
A4R27	0757-0427		R:FXD MET FLM 1.5K OHM 1% 1/8W	28480	0757-0427
A4R28	0757-0427		R:FXD MET FLM 1.5K OHM 1% 1/8W	28480	0757-0427
A4R29	0757-0427		R:FXD MET FLM 1.5K OHM 1% 1/8W	28480	0757-0427
A4U11	1820-0379	7	IC:TTL HS 4W 2-2-2-3 INPT AND/OR GATE	01295	SN74H52N
A4U12	1820-0424	4	IC:TTL HS HEX INVERTER	04713	SN74H04N
A4U13	1820-0605	1	IC:TTL HS QUAD 2-INPT NAND GATE	01295	SN74H01N
A4U14	1820-0512	4	IC:TTL DUAL D F/F	01295	SN74H74N
A4U15	1820-0379		IC:TTL HS 4W 2-2-2-3 INPT AND/OR GATE	01295	SN74H52N
A4U16	1820-0966		IC:CTL DUAL 2-INPT AND 2W AND/OR GATE	14433	MIC 966
A4U21	1820-0186		IC:CTL DUAL 2-INPT AND GATE	07263	U6A985649X
A4U23	1820-0370		IC:TTL HS QUAD 2-INPT NAND GATE	01295	SN74H00N
A4U24	1820-0187		IC:CTL DUAL 2-INPT NOR GATE	07263	U6A985249X

Table 2-5. A4 Microinstruction Decoder 2 Card, Replaceable Parts (Continued)

Reference Designation	HP Part Number	Qty	Description	Mfr Code	Mfr Part Number
A4U25	1820-0370		IC:TTL HS QUAD 2-INPT NAND GATE	01295	SN74H00N
A4U26	1820-0953	1	IC:CTL TRIPLE 2-2-3 INPT AND GATE	14433	MIC 953
A4U27	1820-0186		IC:CTL DUAL 2-INPT AND GATE	07263	U6A985649X
A4U31	1820-0379		IC:TTL HS 4W 2-2-2-3 INPT AND/OR GATE	01295	SN74H52N
A4U33	1820-0375	2	IC:TTL HS 8-INPT NAND GATE	01295	SN74H30N
A4U34	1820-0695	1	IC:TTL SHS DUAL J-K F/F W/PRESET	01295	SN74S113N
A4U35	1820-0186		IC:CTL DUAL 2-INPT AND GATE	07263	U6A985649X
A4U36	1820-0954	1	IC:CTL DUAL 4-INPT AND GATE	07263	U6A995479X
A4U37	1820-0186		IC:CTL DUAL 2-INPT AND GATE	07263	U6A985649X
A4U41	1820-0379		IC:TTL HS 4W 2-2-2-3 INPT AND/OR GATE	01295	SN74H52N
A4U43	1820-0372	1	IC:TTL TRIPLE 3-INPT AND GATE	28480	1820-0372
A4U44	1820-0375		IC:TTL HS 8-INPT NAND GATE	01295	SN74H30N
A4U45	1820-0512		IC:TTL DUAL D F/F	01295	SN74H74N
A4U46	1820-0512		IC:TTL DUAL D F/F	01295	SN74H74N
A4U47	1820-0377		IC:TTL HS DUAL 2-WIDE 2-INPUT	01295	SN74H50N
A4U51	1820-0512	1	IC:TTL DUAL F/F	01295	SN74H74N
A4U54	1820-0141	4	IC:TTL QUAD 2-INPT AND GATE	04713	MC3001P
A4U55	1820-0971	2	IC:CTL DUAL 2W-2-INPT AND/OR GATE	07263	U6A997179X
A4U56	1820-0966		IC:CTL DUAL 2-INPT AND 2W AND/OR GATE	14433	MIC 966
A4U57	1820-0186		IC:CTL DUAL 2-INPT AND GATE	07263	U6A985649X
A4U61	1820-0379		IC:TTL HS 4W 2-2-2-3 INPT AND/OR GATE	01295	SN74H52N
A4U63	1820-0371	2	IC:TTL HS TRIPLE 3-INPT NAND GATE	01295	SN74H10N
A4U64	1820-0370		IC:TTL HS QUAD 2-INPT NAND GATE	01295	SN74H00N
A4U65	1820-0141		IC:TTL QUAD 2-INPT AND GATE	04713	MC3001P
A4U66	1820-0424		IC:TTL HS HEX INVERTER	04713	SN74H04N
A4U67	1820-0370		IC:TTL HS QUAD 2-INPT NAND GATE	01295	SN74H00N
A4U71	1820-0380	1	IC:TTL HS 4W 2-2-2-3 INPT AND/OR INV	01295	SN74H53N
A4U73	1820-0608	3	IC:TTL 1 OF DECODER W/ENABLE	04713	MC4006P
A4U74	1820-0424		IC:TTL HS HEX INVERTER	04713	SN74H04N
A4U76	1820-0384	1	IC:TTL HS TRIPLE 3-INPT EXPANDER	01295	SN74H61N
A4U77	1820-0512		IC:TTL DUAL D F/F	01295	SN74H74N
A4U81	1820-0964	1	IC:CTL TRIPLE 3-3-1 INPT AND GATE	14433	MIC 964
A4U83	1820-0608		IC:TTL 1 OF DECODER W/ENABLE	04713	MC4006P
A4U85	1820-0379		IC:TTL HS 4W 2-2-2-3 INPT AND/OR GATE	01295	SN74H52N
A4U86	1820-0370		IC:TTL HS QUAD 2-INPT NAND GATE	01295	SN74H00N
A4U87	1820-0186		IC:CTL DUAL 2-INPT AND GATE	07263	U6A985649X
A4U91	1820-0839	1	IC:TTL QUAD D F/F	01295	SN35872
A4U92	1820-0074		IC:CTL DUAL 4W-2-INPT	01295	SN454N
A4U93	1820-0608		IC:TTL 1 OF DECODER W/ENABLE	04713	MC4006P
A4U94	1820-0371		IC:TTL HS TRIPLE 3-INPT NAND GATE	01295	SN74H10N
A4U95	1820-0370		IC:TTL HS QUAD 2-INPT NAND GATE	01295	SN74H00N
A4U96	1820-0379		IC:TTL HS 4W 2-2-2-3 INPT AND/OR GATE	01295	SN74H52N
A4U97	1820-0141		IC:TTL QUAD 2-INPT AND GATE	04713	MC3001P
A4U101	1820-0424		IC:TTL HS HEX INVERTER	04713	SN74H04N

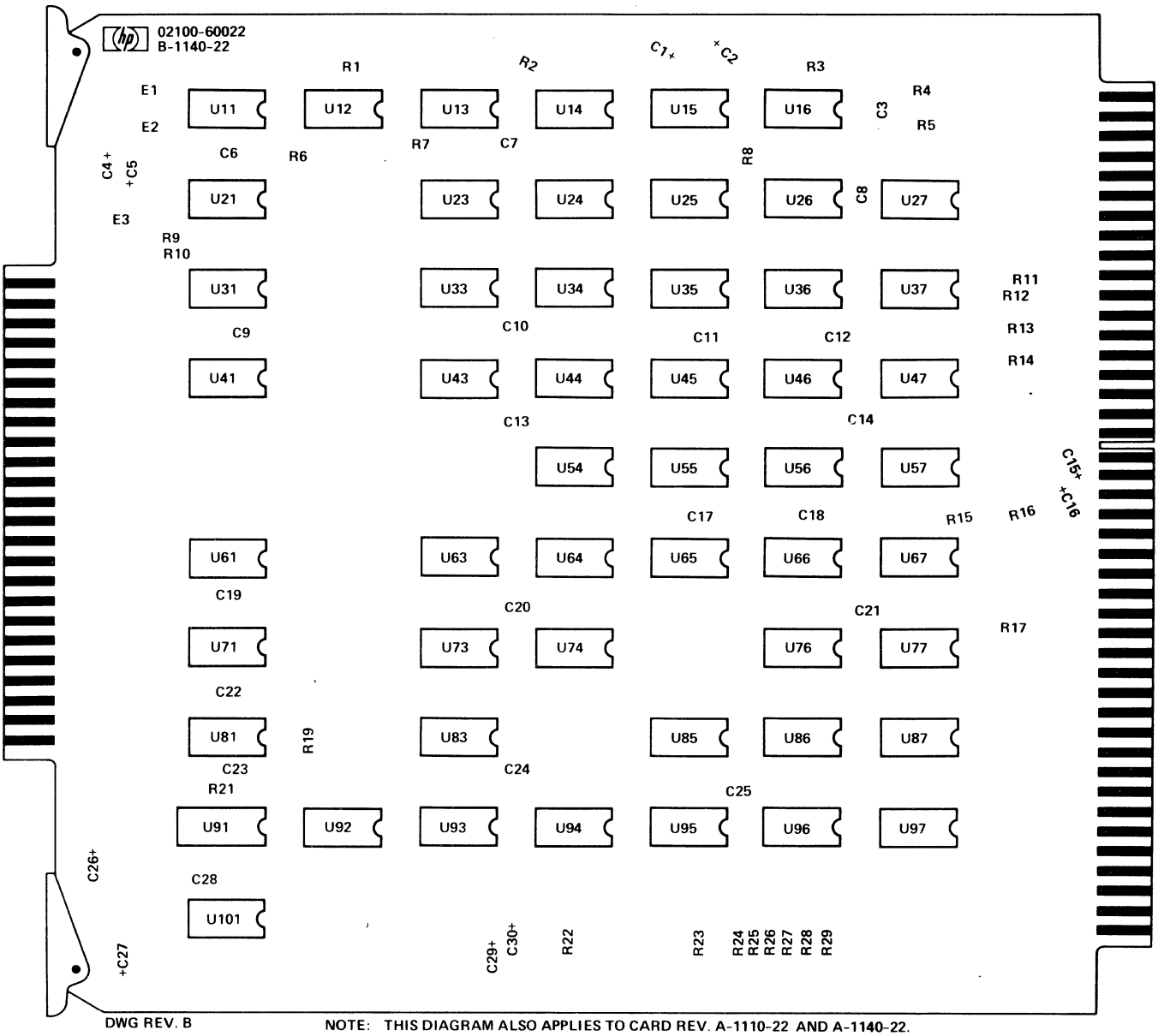

Figure 2-5. A4 Microinstruction Decoder 2 Card, Parts Location Diagram

Table 2-6. A5 Arithmetic/Logic Card, Replaceable Parts

Reference Designation	HP Part Number	Qty	Description	Mfr Code	Mfr Part Number
A5	02100-60001	1	ARITHMETIC LOGIC CARD	28480	02100-60001
A5C1	0180-0197	6	C:FXD ELECT 2.2 UF 10% 20VDCW	56289	150D225X9020A2-DYS
A5C2	0160-2055	18	C:FXD CER 0.01 UF +80-20% 100VDCW	56289	C023F101F103ZS22-CDH
A5C3	0160-2055		C:FXD CER 0.01 UF +80-20% 100VDCW	56289	C023F101F103ZS22-CDH
A5C4	0160-2055		C:FXD CER 0.01 UF +80-20% 100VDCW	56289	C023F101F103ZS22-CDH
A5C5	0180-0197		C:FXD ELECT 2.2 UF 10% 20VDCW	56289	150D225X9020A2-DYS
A5C6	0160-2055		C:FXD CER 0.01 UF +80-20% 100VDCW	56289	C023F101F103ZS22-CDH
A5C7	0160-2055		C:FXD CER 0.01 UF +80-20% 100VDCW	56289	C023F101F103ZS22-CDH
A5C8	0160-2055		C:FXD CER 0.01 UF +80-20% 100VDCW	56289	C023F101F103ZS22-CDH
A5C9	0160-2055		C:FXD CER 0.01 UF +80-20% 100VDCW	56289	C023F101F103ZS22-CDH
A5C10	0160-2055		C:FXD CER 0.01 UF +80-20% 100VDCW	56289	C023F101F103ZS22-CDH
A5C11	0160-2055		C:FXD CER 0.01 UF +80-20% 100VDCW	56289	C023F101F103ZS22-CDH
A5C12	0160-2055		C:FXD CER 0.01 UF +80-20% 100VDCW	56289	C023F101F103ZS22-CDH
A5C13	0180-0197		C:FXD ELECT 2.2 UF 10% 20VDCW	56289	150D225X9020A2-DYS
A5C14	0180-0197		C:FXD ELECT 2.2 UF 10% 20VDCW	56289	150D225X9020A2-DYS
A5C15	0160-2055		C:FXD CER 0.01 UF +80-20% 100VDCW	56289	C023F101F103ZS22-CDH
A5C16	0160-2055		C:FXD CER 0.01 UF +80-20% 100VDCW	56289	C023F101F103ZS22-CDH
A5C17	0160-2055		C:FXD CER 0.01 UF +80-20% 100VDCW	56289	C023F101F103ZS22-CDH
A5C18	0160-2055		C:FXD CER 0.01 UF +80-20% 100VDCW	56289	C023F101F103ZS22-CDH
A5C19	0160-2055		C:FXD CER 0.01 UF +80-20% 100VDCW	56289	C023F101F103ZS22-CDH
A5C20	0180-0197		C:FXD ELECT 2.2 UF 10% 20VDCW	56289	150D225X9020A2-DYS
A5C21	0180-0197		C:FXD ELECT 2.2 UF 10% 20VDCW	56289	150D225X9020A2-DYS
A5C22	0160-2055		C:FXD CER 0.01 UF +80-20% 100VDCW	56289	C023F101F103ZS22-CDH
A5C23	0160-2055		C:FXD CER 0.01 UF +80-20% 100VDCW	56289	C023F101F103ZS22-CDH
A5C24	0160-2055		C:FXD CER 0.01 UF +80-20% 100VDCW	56289	C023F101F103ZS22-CDH
A5E1	0360-0294	3	TERMINAL:SOLDER POINT	28480	0360-0294
A5E2	0360-0294		TERMINAL:SOLDER POINT	28480	0360-0294
A5E3	0360-0294		TERMINAL:SOLDER POINT	28480	0360-0294
A5R1	0698-7229	17	R:FXD FLM 511 OHM 2% 1/8W	28480	0698-7229
A5R2	0698-7229		R:FXD FLM 511 OHM 2% 1/8W	28480	0698-7229
A5R3	0698-7229		R:FXD FLM 511 OHM 2% 1/8W	28480	0698-7229
A5R4	0698-7229		R:FXD FLM 511 OHM 2% 1/8W	28480	0698-7229
A5R5	0698-7229		R:FXD FLM 511 OHM 2% 1/8W	28480	0698-7229
A5R6	0698-7229		R:FXD FLM 511 OHM 2% 1/8W	28480	0698-7229
A5R7	0698-7229		R:FXD FLM 511 OHM 2% 1/8W	28480	0698-7229
A5R8	0698-7229		R:FXD FLM 511 OHM 2% 1/8W	28480	0698-7229
A5R9	0698-3443	1	R:FXD MET FLM 287 OHM 1% 1/8W	28480	0698-3443
A5R10	0698-7229		R:FXD FLM 511 OHM 2% 1/8W	28480	0698-7229
A5R11	0698-7229		R:FXD FLM 511 OHM 2% 1/8W	28480	0698-7229
A5R12	0698-7229		R:FXD FLM 511 OHM 2% 1/8W	28480	0698-7229
A5R13	0698-7229		R:FXD FLM 511 OHM 2% 1/8W	28480	0698-7229
A5R14	0698-7229		R:FXD FLM 511 OHM 2% 1/8W	28480	0698-7229
A5R15	0698-7236	2	R:FXD FLM 1K OHM 2% 1/8W	28480	0698-7236
A5R16	0698-7236		R:FXD FLM 1K OHM 2% 1/8W	28480	0698-7236
A5R17	0698-7229		R:FXD FLM 511 OHM 2% 1/8W	28480	0698-7229
A5R18	0698-7229		R:FXD FLM 511 OHM 2% 1/8W	28480	0698-7229
A5R19	0698-7229		R:FXD FLM 511 OHM 2% 1/8W	28480	0698-7229
A5R20	0698-7229		R:FXD FLM 511 OHM 2% 1/8W	28480	0698-7229
A5R21	0698-7219	3	R:FXD FLM 196 OHM 2% 1/8W	28480	0698-7219
A5R22	0698-7219		R:FXD FLM 196 OHM 2% 1/8W	28480	0698-7219
A5R23	0698-7219		R:FXD FLM 196 OHM 2% 1/8W	28480	0698-7219
A5R24	0698-7214	2	R:FXD FLM 121 OHM 2% 1/8W	28480	0698-7214
A5R25	0698-7214		R:FXD FLM 121 OHM 2% 1/8W	28480	0698-7214
A5R26	0698-7221	2	R:FXD FLM 237 OHM 2% 1/8W	28480	0698-7221
A5R27	0698-7221		R:FXD FLM 237 OHM 2% 1/8W	28480	0698-7221
A5U11	1820-0620	8	IC:TTL DUAL 4-INPT MULTIPLEXER	01295	SN74153N
A5U12	1820-0620		IC:TTL DUAL 4-INPT MULTIPLEXER	01295	SN74153N
A5U13	1820-0606	4	IC:TTL ARITH. LOGIC UNIT/FUNCTION GEN.	01295	SN74181N
A5U15	1820-0612	8	IC:CTL 8-BIT RAM (4 X 2)	07263	U6A903059X
A5U16	1820-0971	8	IC:CTL DUAL 2W-2-INPT AND/OR GATE	07263	U6A997179X
A5U17	1820-0971		IC:CTL DUAL 2W-2-INPT AND/OR GATE	07263	U6A997179X
A5U21	1820-0607	16	IC:TTL 4-BIT RT/LT SHIFT REGISTER	04713	MC4012P
A5U22	1820-0607		IC:TTL 4-BIT RT/LT SHIFT REGISTER	04713	MC4012P
A5U23	1820-0610	8	IC:TTL DUAL 4-INPT MULTIPLEXER	07263	U6B930950X
A5U24	1820-0610		IC:TTL DUAL 4-INPT MULTIPLEXER	07263	U6B930950X
A5U25	1820-0612		IC:CTL 8-BIT RAM (4 X 2)	07263	U6A903059X
A5U26	1820-0231	4	IC:TTL 4-BIT SYNC BINARY COUNTER	07263	U6B931659X
A5U27	1820-0186	10	IC:CTL DUAL 2-INPT AND GATE	07263	U6A985649X
A5U31	1820-0607		IC:TTL 4-BIT RT/LT SHIFT REGISTER	04713	MC4012P
A5U32	1820-0607		IC:TTL 4-BIT RT/LT SHIFT REGISTER	04713	MC4012P
A5U35	1820-0955	2	IC:CTL 8-INPT DUAL OUTPUT AND GATE	07263	U6A995579X
A5U36	1820-0954	1	IC:CTL DUAL 4-INPT AND GATE	07263	U6A995479X
A5U37	1820-0186		IC:CTL DUAL 2-INPT AND GATE	07263	U6A985649X
A5U41	1820-0620		IC:TTL DUAL 4-INPT MULTIPLEXER	01295	SN74153N
A5U42	1820-0620		IC:TTL DUAL 4-INPT MULTIPLEXER	01295	SN74153N

Table 2-6. A5 Arithmetic/Logic Card, Replaceable Parts (Continued)

Reference Designation	HP Part Number	Qty	Description	Mfr Code	Mfr Part Number
A5U43	1820-0606		IC:TTL ARITH. LOGIC UNIT/FUNCTION GEN.	01295	SN74181N
A5U45	1820-0612		IC:CTL 8-BIT RAM (4 X 2)	07263	U6A903059X
A5U46	1820-0971		IC:CTL DUAL 2W-2-INPT AND/OR GATE	07263	U6A997179X
A5U47	1820-0971		IC:CTL DUAL 2W-2-INPT AND/OR GATE	07263	U6A997179X
A5U51	1820-0607		IC:TTL 4-BIT RT/LT SHIFT REGISTER	04713	MC4012P
A5U52	1820-0607		IC:TTL 4-BIT RT/LT SHIFT REGISTER	04713	MC4012P
A5U53	1820-0610		IC:TTL DUAL 4-INPT MULTIPLEXER	07263	U6B930959X
A5U54	1820-0610		IC:TTL DUAL 4-INPT MULTIPLEXER	07263	U6B930959X
A5U55	1820-0612		IC:CTL 8-BIT RAM (4 X 2)	07263	U6A903059X
A5U56	1820-0231		IC:TTL 4-BIT SYNC BINARY COUNTER	07263	U6B931659X
A5U57	1820-0186		IC:CTL DUAL 2-INPT AND GATE	07263	U6A985649X
A5U61	1820-0607		IC:TTL 4-BIT RT/LT SHIFT REGISTER	04713	MC4012P
A5U62	1820-0607		IC:TTL 4-BIT RT/LT SHIFT REGISTER	04713	MC4012P
A5U65	1820-0611	1	IC:TTL LOOK-AHEAD CARRY GENERATOR	01295	SN74182N
A5U66	1820-0186		IC:CTL DUAL 2-INPT AND GATE	07263	U6A985649X
A5U67	1820-0186		IC:CTL DUAL 2-INPT AND GATE	07263	U6A985649X
A5U71	1820-0620		IC:TTL DUAL 4-INPT MULTIPLEXER	01295	SN74153N
A5U72	1820-0620		IC:TTL DUAL 4-INPT MULTIPLEXER	01295	SN74153N
A5U73	1820-0606		IC:TTL ARITH. LOGIC UNIT/FUNCTION GEN.	01295	SN74181N
A5U75	1820-0612		IC:CTL 8-BIT RAM (4 X 2)	07263	U6B930959X
A5U76	1820-0971		IC:CTL DUAL 2W-2-INPT AND/OR GATE	07263	U6A997179X
A5U77	1820-0971		IC:CTL DUAL 2W-2-INPT AND/OR GATE	07263	U6A997179X
A5U81	1820-0607		IC:TTL 4-BIT RT/LT SHIFT REGISTER	04713	MC4012P
A5U82	1820-0607		IC:TTL 4-BIT RT/LT SHIFT REGISTER	04713	MC4012P
A5U83	1820-0610		IC:TTL DUAL 4-INPT MULTIPLEXER	07263	U6B930959X
A5U84	1820-0610		IC:TTL DUAL 4-INPT MULTIPLEXER	07263	U6B930959X
A5U85	1820-0612		IC:CTL 8-BIT RAM (4 X 2)	07263	U6A903059X
A5U86	1820-0231		IC:TTL 4-BIT SYNC BINARY COUNTER	07263	U6B931659X
A5U87	1820-0186		IC:CTL DUAL 2-INPT AND GATE	07263	U6A985649X
A5U88	1820-0186		IC:CTL DUAL 2-INPT AND GATE	07263	U6A985649X
A5U91	1820-0607		IC:TTL 4-BIT RT/LT SHIFT REGISTER	04713	MC4012P
A5U92	1820-0607		IC:TTL 4-BIT RT/LT SHIFT REGISTER	04713	MC4012P
A5U95	1820-0955		IC:CTL 8-INPT DUAL OUTPUT AND GATE	07263	U6A995579X
A5U96	1820-0186		IC:CTL DUAL 2-INPT AND GATE	07263	U6A985649X
A5U97	1820-0186		IC:CTL DUAL 2-INPT AND GATE	07263	U6A985649X
A5U101	1820-0620		IC:TTL DUAL 4-INPT MULTIPLEXER	01295	SN74153N
A5U102	1820-0620		IC:TTL DUAL 4-INPT MULTIPLEXER	01295	SN74153N
A5U103	1820-0606		IC:TTL ARITH. LOGIC UNIT/FUNCTION GEN.	01295	SN74181N
A5U105	1820-0612		IC:CTL 8-BIT RAM (4 X 2)	07263	U6A903059X
A5U106	1820-0971		IC:CTL DUAL 2W-2-INPT AND/OR GATE	07263	U6A997179X
A5U107	1820-0971		IC:CTL DUAL 2W-2-INPT AND/OR GATE	07263	U6A997179X
A5U111	1820-0607		IC:TTL 4-BIT RT/LT SHIFT REGISTER	04713	MC4012P
A5U112	1820-0607		IC:TTL 4-BIT RT/LT SHIFT REGISTER	04713	MC4012P
A5U113	1820-0610		IC:TTL DUAL 4-INPT MULTIPLEXER	07263	U6B930959X
A5U114	1820-0610		IC:TTL DUAL 4-INPT MULTIPLEXER	07263	U6B930959X
A5U115	1820-0612		IC:CTL 8-BIT RAM (4 X 2)	07263	U6A903059X
A5U116	1820-0231		IC:TTL 4-BIT SYNC BINARY COUNTER	07263	U6B931659X
A5U117	1820-0186		IC:CTL DUAL 2-INPT AND GATE	07263	U6A985649X
A5U121	1820-0607		IC:TTL 4-BIT RT/LT SHIFT REGISTER	04713	MC4012P
A5U122	1820-0607		IC:TTL 4-BIT RT/LT SHIFT REGISTER	04713	MC4012P

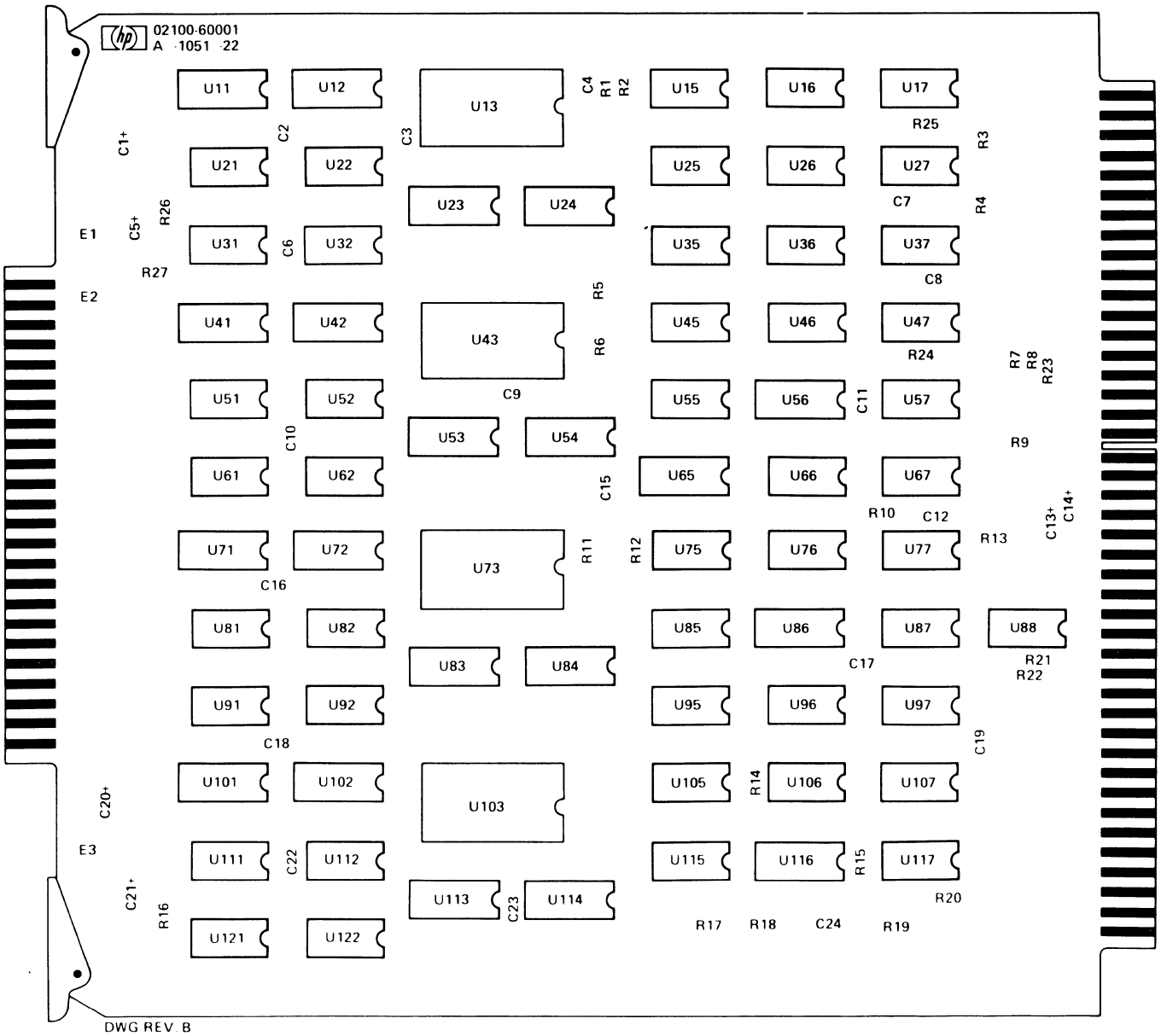

Figure 2-6. A5 Arithmetic/Logic Card, Parts Location Diagram

Table 2-7. A6 Instruction Register Decoder Card, Replaceable Parts

Reference Designation	HP Part Number	Qty	Description	Mfr Code	Mfr Part Number
A6	C2100-60003	1	INSTRUCTION REGISTER DECODER CARD	28480	02100-60003
A6C1	0160-2055	22	C:FXD CER 0.01 UF +80-20% 100VDCW	56289	C023F101F103ZS22-CDH
A6C2	0160-2055		C:FXD CER 0.01 UF +80-20% 100VDCW	56289	C023F101F103ZS22-CDH
A6C3	0160-2055		C:FXD CER 0.01 UF +80-20% 100VDCW	56289	C023F101F103ZS22-CDH
A6C4	0160-2055		C:FXD CER 0.01 UF +80-20% 100VDCW	56289	C023F101F103ZS22-CDH
A6C5	0180-0197	6	C:FXD ELECT 2.2 UF 10% 20VDCW	56289	150D225X9020A2-DYS
A6C6	0180-0197		C:FXD ELECT 2.2 UF 10% 20VDCW	56289	150D225X9020A2-DYS
A6C7	0160-2055		C:FXD CER 0.01 UF +80-20% 100VDCW	56289	C023F101F103ZS22-CDH
A6C8	0160-2055		C:FXD CER 0.01 UF +80-20% 100VDCW	56289	C023F101F103ZS22-CDH
A6C9	0160-2055		C:FXD CER 0.01 UF +80-20% 100VDCW	56289	C023F101F103ZS22-CDH
A6C10	0160-2055		C:FXD CER 0.01 UF +80-20% 100VDCW	56289	C023F101F103ZS22-CDH
A6C11	0160-2055		C:FXD CER 0.01 UF +80-20% 100VDCW	56289	C023F101F103ZS22-CDH
A6C12	0180-0197		C:FXD ELECT 2.2 UF 10% 20VDCW	56289	150D225X9020A2-DYS
A6C13	0160-2055		C:FXD CER 0.01 UF +80-20% 100VDCW	56289	C023F101F103ZS22-CDH
A6C14	0160-2055		C:FXD CER 0.01 UF +80-20% 100VDCW	56289	C023F101F103ZS22-CDH
A6C15	0160-2055		C:FXD CER 0.01 UF +80-20% 100VDCW	56289	C023F101F103ZS22-CDH
A6C16	0180-0197		C:FXD ELECT 2.2 UF 10% 20VDCW	56289	150D225X9020A2-DYS
A6C17	0160-2055		C:FXD CER 0.01 UF +80-20% 100VDCW	56289	C023F101F103ZS22-CDH
A6C18	0160-2055		C:FXD CER 0.01 UF +80-20% 100VDCW	56289	C023F101F103ZS22-CDH
A6C19	0160-2055		C:FXD CER 0.01 UF +80-20% 100VDCW	56289	C023F101F103ZS22-CDH
A6C20	0160-2055		C:FXD CER 0.01 UF +80-20% 100VDCW	56289	C023F101F103ZS22-CDH
A6C21	0180-0197		C:FXD ELECT 2.2 UF 10% 20VDCW	56289	150D225X9020A2-DYS
A6C22	0180-0197		C:FXD ELECT 2.2 UF 10% 20VDCW	56289	150D225X9020A2-DYS
A6C23	0160-2055		C:FXD CER 0.01 UF +80-20% 100VDCW	56289	C023F101F103ZS22-CDH
A6C24	0160-2055		C:FXD CER 0.01 UF +80-20% 100VDCW	56289	C023F101F103ZS22-CDH
A6C25	0160-2055		C:FXD CER 0.01 UF +80-20% 100VDCW	56289	C023F101F103ZS22-CDH
A6C26	0160-2055		C:FXD CER 0.01 UF +80-20% 100VDCW	56289	C023F101F103ZS22-CDH
A6C27	0160-2055		C:FXD CER 0.01 UF +80-20% 100VDCW	56289	C023F101F103ZS22-CDH
A6C28	0160-2055		C:FXD CER 0.01 UF +80-20% 100VDCW	56289	C023F101F103ZS22-CDH
A6C29(NOTE 4)	0140-0194	1	C: FXD MICA 110 PF 5%	72136	RDM15F111J3C
A6R1(NOTE 1)	0757-0280	8	R: FXD MET FLM 1K OHM 1% 1/8W	28480	0757-0280
A6R2	0757-0280		R:FXD MET FLM 1K OHM 1% 1/8W	28480	0757-0280
A6R3	0698-3443	1	R:FXD MET FLM 287 OHM 1% 1/8W	28480	0698-3443
A6R4	0757-0280		R:FXD MET FLM 1K OHM 1% 1/8W	28480	0757-0280
A6R5	0757-0280		R:FXD MET FLM 1K OHM 1% 1/8W	28480	0757-0280
A6R6	0757-0280		R:FXD MET FLM 1K OHM 1% 1/8W	28480	0757-0280
A6R7	0757-0416	2	R:FXD MET FLM 511 OHM 1% 1/8W	28480	0757-0416
A6R8	C698-3442	2	R:FXD MET FLM 237 OHM 1% 1/8W	28480	0698-3442
A6R9	0698-3442		R:FXD MET FLM 237 OHM 1% 1/8W	28480	0698-3442
A6R10	C698-3446	1	R:FXD MET FLM 383 OHM 1% 1/8W	28480	0698-3446
A6R11	0698-3445	2	R:FXD MET FLM 348 OHM 1% 1/8W	28480	0698-3445
A6R12	0757-0416		R:FXD MET FLM 511 OHM 1% 1/8W	28480	0757-0416
A6R13	0757-0280		R:FXD MET FLM 1K OHM 1% 1/8W	28480	0757-0280
A6R14	0698-3445		R:FXD MET FLM 348 OHM 1% 1/8W	28480	0698-3445
A6R15	0757-0280		R:FXD MET FLM 1K OHM 1% 1/8W	28480	0757-0280
A6R16	0757-0280		R:FXD MET FLM 1K OHM 1% 1/8W	28480	0757-0280
A6R17(NOTE 2)	0698-0082	1	R:FXD MET FLM 464 OHM 1% 1/8W	28480	0698-0082
A6U11	1820-0512	1	IC:TTL DUAL D F/F	01295	SN74H74N
A6U12	1820-0141	7	IC:TTL QUAD 2-INPT AND GATE	04713	MC3001P
A6U13(NOTE 1)	1820-0451	1	IC:TTL DUAL J-K F/F	04713	MC3062P
A6U13(NOTE 3)	1820-0695	1	IC:TTL SHS DUAL J-K F/F W/PRESET	01295	SN74S113N
A6U14	1820-0971	10	IC:CTL DUAL 2W-2-INPT AND/OR GATE	07263	U6A997179X
A6U15	1820-0370	6	IC:TTL HS QUAD 2-INPT NAND GATE	01295	SN74H00N
A6U16	1820-0424	7	IC:TTL HS HEX INVERTER	04713	SN74H04N
A6U17	1820-0608	6	IC:TTL 1 OF DECODER W/ENABLE	04713	MC4006P
A6U21	1820-0370		IC:TTL HS QUAD 2-INPT NAND GATE	01295	SN74H00N
A6U22	1820-0424		IC:TTL HS HEX INVERTER	04713	SN74H04N
A6U23	1820-0373	1	IC:TTL HS DUAL 4-INPT NAND GATE	01295	SN74H20N
A6U24	1820-0971		IC:CTL DUAL 2W-2-INPT AND/OR GATE	07263	U6A997179X
A6U25	1820-0971		IC:CTL DUAL 2W-2-INPT AND/OR GATE	07263	U6A997179X
A6U26	1820-0424		IC:TTL HS HEX INVERTER	04713	SN74H04N
A6U27	1820-0608		IC:TTL 1 OF DECODER W/ENABLE	04713	MC4006P
A6U31	1820-0971		IC:CTL DUAL 2W-2-INPT AND/OR GATE	07263	U6A997179X
A6U32	1820-0971		IC:CTL DUAL 2W-2-INPT AND/OR GATE	07263	U6A997179X
A6U33	1820-0141		IC:TTL QUAD 2-INPT AND GATE	04713	MC3001P
A6U34	1820-0370		IC:TTL HS QUAD 2-INPT NAND GATE	01295	SN74H00N
A6U35	1820-0608		IC:TTL 1 OF DECODER W/ENABLE	04713	MC4006P
A6U36	1820-0608		IC:TTL 1 OF DECODER W/ENABLE	04713	MC4006P
A6U37	1820-0424		IC:TTL HS HEX INVERTER	04713	SN74H04N
A6U41	1820-0966	2	IC:CTL DUAL 2-INPT AND 2W AND/OR GATE	14433	MIC 966
A6U42	1820-0971		IC:CTL DUAL 2W-2-INPT AND/OR GATE	07263	U6A997179X
A6U43	1820-0609	2	IC:TTL DUAL J-K F/F W/COM. CLK & RESET	04713	MC3061P
A6U44	1820-0239	2	IC:TTL QUAD 2-INPT NOR GATE	28480	1820-0239
A6U45	1820-0424		IC:TTL HS HEX INVERTER	04713	SN74H04N
A6U46	1820-0374	2	IC:TTL HS DUAL 4-INPT AND GATE	01295	SN74H21N
A6U47	1820-0205	1	IC:TTL QUAD 2-INPT OR GATE	28480	1820-0205

NOTES:
1. Used on card rev. 1109 only.
2. First used on card rev. 1202.
3. First used on card rev. 1140.
4. First used on card rev. 1238.

Table 2-7. A6 Instruction Register Decoder Card, Replaceable Parts (Continued)

Reference Designation	HP Part Number	Qty	Description	Mfr Code	Mfr Part Number
A6U51	1820-0966		IC:CTL DUAL 2-INPT AND 2W AND/OR GATE	14433	MIC 966
A6U52	1820-0971		IC:CTL DUAL 2W-2-INPT AND/OR GATE	07263	U6A997179X
A6U53	1820-0239		IC:TTL QUAD 2-INPT NOR GATE	28480	1820-0239
A6U54	1820-0608		IC:TTL 1 OF DECODER W/ENABLE	04713	MC4006P
A6U55	1820-0231	1	IC:TTL 4-BIT SYNC BINARY COUNTER	07263	U6B931659X
A6U56	1820-0301	4	IC:TTL QUAD BI-STABLE D-LATCH	01295	SN7475N
A6U57	1820-0141		IC:TTL QUAD 2-INPT AND GATE	04713	MC3001P
A6U61	1820-0141		IC:TTL QUAD 2-INPT AND GATE	04713	MC3001P
A6U62	1820-0971		IC:CTL DUAL 2W-2-INPT AND/OR GATE	07263	U6A997179X
A6U63	1820-0971		IC:CTL DUAL 2W-2-INPT AND/OR GATE	07263	U6A997179X
A6U64	1820-0374		IC:TTL HS DUAL 4-INPT AND GATE	01295	SN74H21N
A6U65	1820-0186	5	IC:CTL DUAL 2-INPT AND GATE	07263	U6A985649X
A6U66	1820-0372	2	IC:TTL TRIPLE 3-INPT AND GATE	28480	1820-0372
A6U67	1820-0301		IC:TTL QUAD BI-STABLE D-LATCH	01295	SN7475N
A6U71	1820-0372		IC:TTL TRIPLE 3-INPT AND GATE	28480	1820-0372
A6U72	1820-0609		IC:TTL DUAL J-K F/F W/COM. CLK & RESET	04713	MC3061P
A6U73	1820-0971		IC:CTL DUAL 2W-2-INPT AND/OR GATE	07263	U6A997179X
A6U74	1820-0608		IC:TTL 1 OF DECODER W/ENABLE	04713	MC4006P
A6U75	1820-0186		IC:CTL DUAL 2-INPT AND GATE	07263	U6A985649X
A6U76	1820-0378	2	IC:TTL HS 2-WIDE 2-INPT	01295	SN74H51N
A6U77	1820-0301		IC:TTL QUAD BI-STABLE D-LATCH	01295	SN7475N
A6U82	1820-0186		IC:CTL DUAL 2-INPT AND GATE	07263	U6A985649X
A6U83	1820-0370		IC:TTL HS QUAD 2-INPT NAND GATE	01295	SN74H00N
A6U84	1820-0370		IC:TTL HS QUAD 2-INPT NAND GATE	01295	SN74H00N
A6U85	1820-0424		IC:TTL HS HEX INVERTER	04713	SN74H04N
A6U86	1820-0378		IC:TTL HS 2-WIDE 2-INPT	01295	SN74H51N
A6U87	1820-0301		IC:TTL QUAD BI-STABLE D-LATCH	01295	SN7475N
A6U91	1820-0141		IC:TTL QUAD 2-INPT AND GATE	04713	MC3001P
A6U92	1820-0187	1	IC:CTL DUAL 2-INPT NOR GATE	07263	U6A985249X
A6U93	1820-0370		IC:TTL HS QUAD 2-INPT NAND GATE	01295	SN74H00N
A6U94	1820-0953	1	IC:CTL TRIPLE 2-2-3 INPT AND GATE	14433	MIC 953
A6U95	1820-0141		IC:TTL QUAD 2-INPT AND GATE	04713	MC3001P
A6U96	1820-0186		IC:CTL DUAL 2-INPT AND GATE	07263	U6A985649X
A6U97	1820-0141		IC:TTL QUAD 2-INPT AND GATE	04713	MC3001P
A6U104	1820-0424		IC:TTL HS HEX INVERTER	04713	SN74H04N
A6U105	1820-0605	1	IC:TTL HS QUAD 2-INPT NAND GATE	01295	SN74H01N
A6U107	1820-0186		IC:CTL DUAL 2-INPT AND GATE	07263	U6A985649X

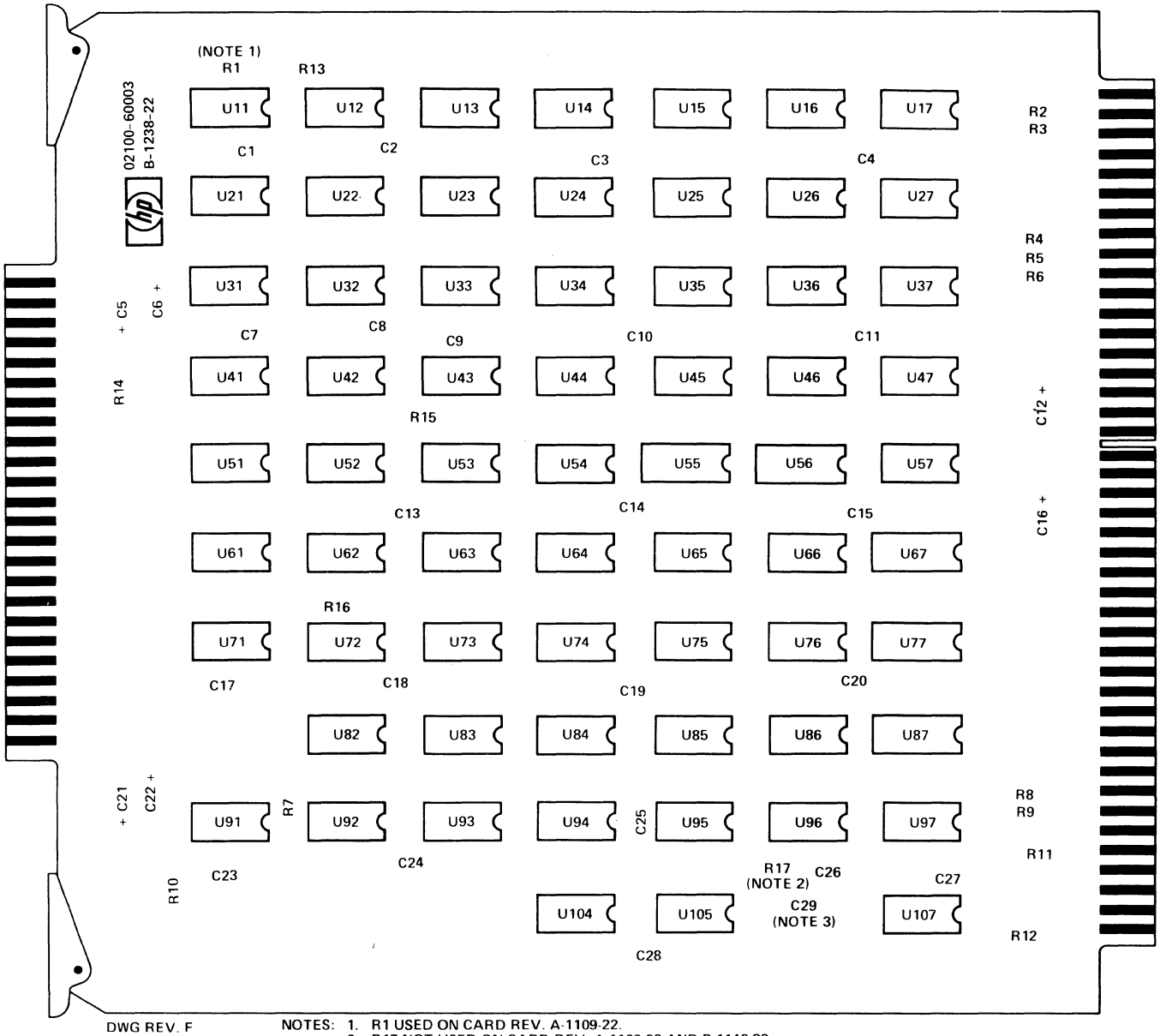

DWG REV. F

NOTES:
1. R1 USED ON CARD REV. A-1109-22.
2. R17 NOT USED ON CARD REV. A-1109-22 AND B-1140-22.
3. C29 NOT USED ON CARD REV. A-1109-22, B-1140-22, AND B-1202-22.

Figure 2-7. A6 Instruction Register Decoder Card, Parts Location Diagram

Table 2-8. A7 I/O Control Card, Replaceable Parts

Reference Designation	HP Part Number	Qty	Description	Mfr Code	Mfr Part Number
A7	C2100-60024	1	I/O CONTROL CARD	28480	02100-60024
A7C1	0180-0197	10	C:FXD ELECT 2.2 UF 10% 20VDCW	56289	150D225X9020A2-DYS
A7C2	0180-0197		C:FXD ELECT 2.2 UF 10% 20VDCW	56289	150D225X9020A2-DYS
A7C3	0160-2055	22	C:FXD CER 0.01 UF +80-20% 100VDCW	56289	C023F101F103ZS22-CDH
A7C4	0180-2126	1	C:FXD ELECT 1.5 UF 5% 35VDCW	28480	0180-2126
A7C5	0160-2055		C:FXD CER 0.01 UF +80-20% 100VDCW	56289	C023F101F103ZS22-CDH
A7C6	0160-2055		C:FXD CER 0.01 UF +80-20% 100VDCW	56289	C023F101F103ZS22-CDH
A7C7	0160-2055		C:FXD CER 0.01 UF +80-20% 100VDCW	56289	C023F101F103ZS22-CDH
A7C8	0160-2055		C:FXD CER 0.01 UF +80-20% 100VDCW	56289	C023F101F103ZS22-CDH
A7C9	0180-0197		C:FXD ELECT 2.2 UF 10% 20VDCW	56289	150D225X9020A2-DYS
A7C10	0180-0197		C:FXD ELECT 2.2 UF 10% 20VDCW	56289	150D225X9020A2-DYS
A7C11	0160-2055		C:FXD CER 0.01 UF +80-20% 100VDCW	56289	C023F101F103ZS22-CDH
A7C12	0160-2055		C:FXD CER 0.01 UF +80-20% 100VDCW	56289	C023F101F103ZS22-CDH
A7C13	0160-2055		C:FXD CER 0.01 UF +80-20% 100VDCW	56289	C023F101F103ZS22-CDH
A7C14	0160-2055		C:FXD CER 0.01 UF +80-20% 100VDCW	56289	C023F101F103ZS22-CDH
A7C15	0160-2055		C:FXD CER 0.01 UF +80-20% 100VDCW	56289	C023F101F103ZS22-CDH
A7C16	0160-2055		C:FXD CER 0.01 UF +80-20% 100VDCW	56289	C023F101F103ZS22-CDH
A7C17	0160-2055		C:FXD CER 0.01 UF +80-20% 100VDCW	56289	C023F101F103ZS22-CDH
A7C18	0160-2055		C:FXD CER 0.01 UF +80-20% 100VDCW	56289	C023F101F103ZS22-CDH
A7C19	0160-2055		C:FXD CER 0.01 UF +80-20% 100VDCW	56289	C023F101F103ZS22-CDH
A7C20	0180-0197		C:FXD ELECT 2.2 UF 10% 20VDCW	56289	150D225X9020A2-DYS
A7C21	0180-0197		C:FXD ELECT 2.2 UF 10% 20VDCW	56289	150D225X9020A2-DYS
A7C22	0160-2055		C:FXD CER 0.01 UF +80-20% 100VDCW	56289	C023F101F103ZS22-CDH
A7C23	0160-2055		C:FXD CER 0.01 UF +80-20% 100VDCW	56289	C023F101F103ZS22-CDH
A7C24	0160-2055		C:FXD CER 0.01 UF +80-20% 100VDCW	56289	C023F101F103ZS22-CDH
A7C25	0160-2055		C:FXD CER 0.01 UF +80-20% 100VDCW	56289	C023F101F103ZS22-CDH
A7C26	0160-2055		C:FXD CER 0.01 UF +80-20% 100VDCW	56289	C023F101F103ZS22-CDH
A7C27	0180-0197		C:FXD ELECT 2.2 UF 10% 20VDCW	56289	150D225X9020A2-DYS
A7C28	0180-0197		C:FXD ELECT 2.2 UF 10% 20VDCW	56289	150D225X9020A2-DYS
A7C29	0160-2055		C:FXD CER 0.01 UF +80-20% 100VDCW	56289	C023F101F103ZS22-CDH
A7C30	0160-2055		C:FXD CER 0.01 UF +80-20% 100VDCW	56289	C023F101F103ZS22-CDH
A7C31	0180-0197		C:FXD ELECT 2.2 UF 10% 20VDCW	56289	150D225X9020A2-DYS
A7C32	0180-0197		C:FXD ELECT 2.2 UF 10% 20VDCW	56289	150D225X9020A2-DYS
A7C33	0160-2055		C:FXD CER 0.01 UF +80-20% 100VDCW	56289	C023F101F103ZS22-CDH
A7CR1	1902-3043	1	DIODE:BREAKDOWN 3.32V 2%	04713	SZ10939-45
A7Q1	1854-0215	5	TSTR:SI NPN	80131	2N3904
A7Q2	1854-0215		TSTR:SI NPN	80131	2N3904
A7Q3	1854-0215		TSTR:SI NPN	80131	2N3904
A7Q4	1854-0215		TSTR:SI NPN	80131	2N3904
A7Q5	1854-0215		TSTR:SI NPN	80131	2N3904
A7R1	0683-3915	1	R:FXD COMP 390 OHM 5% 1/4W	01121	CB 3915
A7R2	0683-1825	1	R:FXD COMP 1800 OHM 5% 1/4W	01121	CB 1825
A7R3	0698-7253	1	R:FXD MET FLM 5.11K OHM 2% 1/8W	28480	0698-7253
A7R5	0683-1025	2	R:FXD COMP 1000 OHM 5% 1/4W	01121	CB 1025
A7R6	0698-7229	18	R:FXD FLM 511 OHM 2% 1/8W	28480	0698-7229
A7R7	0683-1525	1	R:FXD COMP 1500 OHM 5% 1/4W	01121	CB 1525
A7R8	0683-1025		R:FXD COMP 1000 OHM 5% 1/4W	01121	CB 1025
A7R9	0683-4715	5	R:FXD COMP 470 OHM 5% 1/4W	01121	CB 4715
A7R10	0698-7236	23	R:FXD FLM 1K OHM 2% 1/8W	28480	0698-7236
A7R11	0698-7228	18	R:FXD FLM 464 OHM 2% 1/8W	28480	0698-7228
A7R12	0698-7228		R:FXD FLM 464 OHM 2% 1/8W	28480	0698-7228
A7R13	0698-7236		R:FXD FLM 1K OHM 2% 1/8W	28480	0698-7236
A7R14	0698-7228		R:FXD FLM 464 OHM 2% 1/8W	28480	0698-7228
A7R15	0698-7240	8	R:FXD MET FLM 1.47K OHM 2% 1/8W	28480	0698-7240
A7R16	0698-7240		R:FXD MET FLM 1.47K OHM 2% 1/8W	28480	0698-7240
A7R17	0698-7240		R:FXD MET FLM 1.47K OHM 2% 1/8W	28480	0698-7240
A7R18	0698-7229		R:FXD FLM 511 OHM 2% 1/8W	28480	0698-7229
A7R19	0698-3394	1	R:FXD MET FLM 31.6 OHM 1% 1/2W	28480	0698-3394
A7R20	0683-4715		R:FXD COMP 470 OHM 5% 1/4W	01121	CB 4715
A7R21	0683-1005	1	R:FXD COMP 10 OHM 5% 1/4W	01121	CB 1005
A7R22	0683-4715		R:FXD COMP 470 OHM 5% 1/4W	01121	CB 4715
A7R23	0683-1015	4	R:FXD COMP 100 OHM 5% 1/4W	01121	CB 1015
A7R24	0683-1015		R:FXD COMP 100 OHM 5% 1/4W	01121	CB 1015
A7R25	0683-4715		R:FXD COMP 470 OHM 5% 1/4W	01121	CB 4715
A7R26	0683-1015		R:FXD COMP 100 OHM 5% 1/4W	01121	CB 1015
A7R27	0683-4715		R:FXD COMP 470 OHM 5% 1/4W	01121	CB 4715
A7R28	0683-1015		R:FXD COMP 100 OHM 5% 1/4W	01121	CB 1015
A7R30	0698-7231	1	R:FXD FLM 619 OHM 2% 1/8W	28480	0698-7231
A7R31	0698-7240		R:FXD MET FLM 1.47K OHM 2% 1/8W	28480	0698-7240
A7R32	0698-7240		R:FXD MET FLM 1.47K OHM 2% 1/8W	28480	0698-7240
A7R34	0698-7228		R:FXD FLM 464 OHM 2% 1/8W	28480	0698-7228
A7R35	0698-7229		R:FXD FLM 511 OHM 2% 1/8W	28480	0698-7229
A7R36	0698-7236		R:FXD FLM 1K OHM 2% 1/8W	28480	0698-7236
A7R37	0698-7240		R:FXD MET FLM 1.47K OHM 2% 1/8W	28480	0698-7240
A7R38	0698-7217	1	R:FXD FLM 162 OHM 2% 1/8W	28480	0698-7217

Table 2-8. A7 I/O Control Card, Replaceable Parts (Continued)

Reference Designation	HP Part Number	Qty	Description	Mfr Code	Mfr Part Number
A7R39	0698-7236		R:FXD FLM 1K OHM 2% 1/8W	28480	0698-7236
A7R40	0698-7236		R:FXD FLM 1K OHM 2% 1/8W	28480	0698-7236
A7R41	0698-7223	2	R:FXD FLM 287 OHM 2% 1/8W	28480	0698-7223
A7R42	0698-7236		R:FXD FLM 1K OHM 2% 1/8W	28480	0698-7236
A7R43	0698-7236		R:FXD FLM 1K OHM 2% 1/8W	28480	0698-7236
A7R44	0698-7223		R:FXD FLM 287 OHM 2% 1/8W	28480	0698-7223
A7R45	0698-7236		R:FXD FLM 1K OHM 2% 1/8W	28480	0698-7236
A7R46	0698-7229		R:FXD FLM 511 OHM 2% 1/8W	28480	0698-7229
A7R47	0698-7236		R:FXD FLM 1K OHM 2% 1/8W	28480	0698-7236
A7R48	0698-7229		R:FXD FLM 511 OHM 2% 1/8W	28480	0698-7229
A7R49	0698-7224	3	R:FXD FLM 316 OHM 2% 1/8W	28480	0698-7224
A7R50	0698-7228		R:FXD FLM 464 OHM 2% 1/8W	28480	0698-7228
A7R51	0698-7228		R:FXD FLM 464 OHM 2% 1/8W	28480	0698-7228
A7R52	0698-7228		R:FXD FLM 464 OHM 2% 1/8W	28480	0698-7228
A7R53	0698-7228		R:FXD FLM 464 OHM 2% 1/8W	28480	0698-7228
A7R54	0698-7236		R:FXD FLM 1K OHM 2% 1/8W	28480	0698-7236
A7R55	0698-7228		R:FXD FLM 464 OHM 2% 1/8W	28480	0698-7228
A7R56	0698-7228		R:FXD FLM 464 OHM 2% 1/8W	28480	0698-7228
A7R57	0698-7228		R:FXD FLM 464 OHM 2% 1/8W	28480	0698-7228
A7R58	0698-7228		R:FXD FLM 464 OHM 2% 1/8W	28480	0698-7228
A7R59	0698-7236		R:FXD FLM 1K OHM 2% 1/8W	28480	0698-7236
A7R60	0698-7236		R:FXD FLM 1K OHM 2% 1/8W	28480	0698-7236
A7R61	0698-7228		R:FXD FLM 464 OHM 2% 1/8W	28480	0698-7228
A7R62	0698-7228		R:FXD FLM 464 OHM 2% 1/8W	28480	0698-7228
A7R63	0698-7228		R:FXD FLM 464 OHM 2% 1/8W	28480	0698-7228
A7R64	0698-7228		R:FXD FLM 464 OHM 2% 1/8W	28480	0698-7228
A7R65	0698-7229		R:FXD FLM 511 OHM 2% 1/8W	28480	0698-7229
A7R66	0698-7229		R:FXD FLM 511 OHM 2% 1/8W	28480	0698-7229
A7R67	0698-7228		R:FXD FLM 464 OHM 2% 1/8W	28480	0698-7228
A7R68	0698-7229		R:FXD FLM 511 OHM 2% 1/8W	28480	0698-7229
A7R69	0698-7236		R:FXD FLM 1K OHM 2% 1/8W	28480	0698-7236
A7R70	0698-7233	1	R:FXD FLM 750 OHM 2% 1/8W	28480	0698-7233
A7R71	0698-7225	1	R:FXD FLM 348 OHM 2% 1/8W	28480	0698-7225
A7R72	0698-7224		R:FXD FLM 316 OHM 2% 1/8W	28480	0698-7224
A7R73	0698-7236		R:FXD FLM 1K OHM 2% 1/8W	28480	0698-7236
A7R74	0698-7229		R:FXD FLM 511 OHM 2% 1/8W	28480	0698-7229
A7R75	0698-7236		R:FXD FLM 1K OHM 2% 1/8W	28480	0698-7236
A7R76	0698-7229		R:FXD FLM 511 OHM 2% 1/8W	28480	0698-7229
A7R77	0698-7229		R:FXD FLM 511 OHM 2% 1/8W	28480	0698-7229
A7R78	0698-7229		R:FXD FLM 511 OHM 2% 1/8W	28480	0698-7229
A7R79	0698-7229		R:FXD FLM 511 OHM 2% 1/8W	28480	0698-7229
A7R80	0698-7229		R:FXD FLM 511 OHM 2% 1/8W	28480	0698-7229
A7R81	0698-7236		R:FXD FLM 1K OHM 2% 1/8W	28480	0698-7236
A7R82	0698-7236		R:FXD FLM 1K OHM 2% 1/8W	28480	0698-7236
A7R83	0698-7236		R:FXD FLM 1K OHM 2% 1/8W	28480	0698-7236
A7R84	0698-7236		R:FXD FLM 1K OHM 2% 1/8W	28480	0698-7236
A7R85	0698-7236		R:FXD FLM 1K OHM 2% 1/8W	28480	0698-7236
A7R86	0698-7229		R:FXD FLM 511 OHM 2% 1/8W	28480	0698-7229
A7R87	0698-7229		R:FXD FLM 511 OHM 2% 1/8W	28480	0698-7229
A7R88	0698-7236		R:FXD FLM 1K OHM 2% 1/8W	28480	0698-7236
A7R89	0698-7236		R:FXD FLM 1K OHM 2% 1/8W	28480	0698-7236
A7R90	0698-7229		R:FXD FLM 511 OHM 2% 1/8W	28480	0698-7229
A7R91	0698-7224		R:FXD FLM 316 OHM 2% 1/8W	28480	0698-7224
A7R92	0698-7236		R:FXD FLM 1K OHM 2% 1/8W	28480	0698-7236
A7R93	0698-7230	1	R:FXD FLM 562 OHM 2% 1/8W	28480	0698-7230
A7R94	0698-7226	1	R:FXD FLM 383 OHM 2% 1/8W	28480	0698-7226
A7R95	0698-7228		R:FXD FLM 464 OHM 2% 1/8W	28480	0698-7228
A7R96	0698-7240		R:FXD MET FLM 1.47K OHM 2% 1/8W	28480	0698-7240
A7R97	0698-7240		R:FXD MET FLM 1.47K OHM 2% 1/8W	28480	0698-7240
A7R98	0698-7229		R:FXD FLM 511 OHM 2% 1/8W	28480	0698-7229
A7S1	3101-1213	1	SWITCH:TOGGLE DPST-DB SUB-MINIATURE	81640	T8001
A7U12	1820-0141	8	IC:TTL QUAD 2-INPT AND GATE	04713	MC3001P
A7U13	1820-0186	7	IC:CTL DUAL 2-INPT AND GATE	07263	U6A985649X
A7U14	1820-0605	2	IC:TTL HS QUAD 2-INPT NAND GATE	01295	SN74H01N
A7U15	1820-0370	9	IC:TTL HS QUAD 2-INPT NAND GATE	01295	SN74H00N
A7U16	1820-0613	7	IC:HS HEX INVERTER W/OPEN COLL.	01295	SN74H05N
A7U17	1820-0141		IC:TTL QUAD 2-INPT AND GATE	04713	MC3001P
A7U22	1820-0512	3	IC:TTL DUAL D F/F	01295	SN74H74N
A7U23	1820-0372	2	IC:TTL TRIPLE 3-INPT AND GATE	28480	1820-0372
A7U24	1820-0371	3	IC:TTL HS TRIPLE 3-INPT NAND GATE	01295	SN74H10N
A7U25	1820-0370		IC:TTL HS QUAD 2-INPT NAND GATE	01295	SN74H00N
A7U26	1820-0512		IC:TTL DUAL D F/F	01295	SN74H74N
A7U27	1820-0424	5	IC:TTL HS HEX INVERTER	04713	SN74H04N
A7U31	1820-0187	1	IC:CTL DUAL 2-INPT NOR GATE	07263	U6A985249X
A7U32	1820-0605		IC:TTL HS QUAD 2-INPT NAND GATE	01295	SN74H01N

Table 2-8. A7 I/O Control Card, Replaceable Parts (Continued)

Reference Designation	HP Part Number	Qty	Description	Mfr Code	Mfr Part Number
A7U33	1820-0512		IC:TTL DUAL D F/F	01295	SN74H74N
A7U34	1820-0370		IC:TTL HS QUAD 2-INPT NAND GATE	01295	SN74H00N
A7U35	1820-0373	2	IC:TTL HS DUAL 4-INPT NAND GATE	01295	SN74H20N
A7U36	1820-0379	2	IC:TTL HS 4W 2-2-2-3 INPT AND/OR GATE	01295	SN74H52N
A7U37	1820-0186		IC:CTL DUAL 2-INPT AND GATE	07263	U6A985649X
A7U42	1820-0370		IC:TTL HS QUAD 2-INPT NAND GATE	01295	SN74H00N
A7U43	1820-0371		IC:TTL HS TRIPLE 3-INPT NAND GATE	01295	SN74H10N
A7U44	1820-0370		IC:TTL HS QUAD 2-INPT NAND GATE	01295	SN74H00N
A7U45	1820-0370		IC:TTL HS QUAD 2-INPT NAND GATE	01295	SN74H00N
A7U46	1820-0379		IC:TTL HS 4W 2-2-2-3 INPT AND/OR GATE	01295	SN74H52N
A7U47	1820-0186		IC:CTL DUAL 2-INPT AND GATE	07263	U6A985649X
A7U51	1820-0613		IC:HS HEX INVERTER W/OPEN COLL.	01295	SN74H05N
A7U52	1820-0613		IC:HS HEX INVERTER W/OPEN COLL.	01295	SN74H05N
A7U53	1820-0141		IC:TTL QUAD 2-INPT AND GATE	04713	MC3001P
A7U54	1820-0371		IC:TTL HS TRIPLE 3-INPT NAND GATE	01295	SN74H10N
A7U55	1820-0373		IC:TTL HS DUAL 4-INPT NAND GATE	01295	SN74H20N
A7U56	1820-0372		IC:TTL TRIPLE 3-INPT AND GATE	28480	1820-0372
A7U57(NOTE 1)	1820-0451	1	IC:TTL DUAL J-K F/F	04713	MC3062P
A7U62	1820-0613		IC:HS HEX INVERTER W/OPEN COLL.	01295	SN74H05N
A7U63	1820-0424		IC:TTL HS HEX INVERTER	04713	SN74H04N
A7U64	1820-0370		IC:TTL HS QUAD 2-INPT NAND GATE	01295	SN74H00N
A7U65	1820-0370		IC:TTL HS QUAD 2-INPT NAND GATE	01295	SN74H00N
A7U66	1820-0485	1	IC:CTL HEX LEVEL RESTORER	07263	U6B981649X
A7U67	1820-0370		IC:TTL HS QUAD 2-INPT NAND GATE	01295	SN74H00N
A7U71	1820-0424		IC:TTL HS HEX INVERTER	04713	SN74H04N
A7U72	1820-0613		IC:HS HEX INVERTER W/OPEN COLL.	01295	SN74H05N
A7U73	1820-0613		IC:HS HEX INVERTER W/OPEN COLL.	01295	SN74H05N
A7U74	1820-0301	2	IC:TTL QUAD BI-STABLE D-LATCH	01295	SN7475N
A7U75	1820-0141		IC:TTL QUAD 2-INPT AND GATE	04713	MC3001P
A7U76	1820-0609	1	IC:TTL DUAL J-K F/F W/COM. CLK & RESET	04713	MC3061P
A7U77	1820-0186		IC:CTL DUAL 2-INPT AND GATE	07263	U6A985649X
A7U81	1820-0424		IC:TTL HS HEX INVERTER	04713	SN74H04N
A7U82	1820-0613		IC:HS HEX INVERTER W/OPEN COLL.	01295	SN74H05N
A7U83	1820-0301		IC:TTL QUAD BI-STABLE D-LATCH	01295	SN7475N
A7U84	1820-0186		IC:CTL DUAL 2-INPT AND GATE	07263	U6A985649X
A7U85	1820-0186		IC:CTL DUAL 2-INPT AND GATE	07263	U6A985649X
A7U86	1820-0186		IC:CTL DUAL 2-INPT AND GATE	07263	U6A985649X
A7U87	1820-0141		IC:TTL QUAD 2-INPT AND GATE	04713	MC3001P
A7U92	1820-0141		IC:TTL QUAD 2-INPT AND GATE	04713	MC3001P
A7U93	1820-0141		IC:TTL QUAD 2-INPT AND GATE	04713	MC3001P
A7U97	1820-0482	2	IC:CTL 1 OF 8 DECODER	07263	U6B983849X
A7U105	1820-0424		IC:TTL HS HEX INVERTER	04713	SN74H04N
A7U106	1820-0482		IC:CTL 1 OF 8 DECODER	07263	U6B983849X
A7U107	1820-0141		IC:TTL QUAD 2-INPT AND GATE	04713	MC3001P

NOTES: 1. Part no. 1820-0695 used on some cards; the two parts are interchangeable.

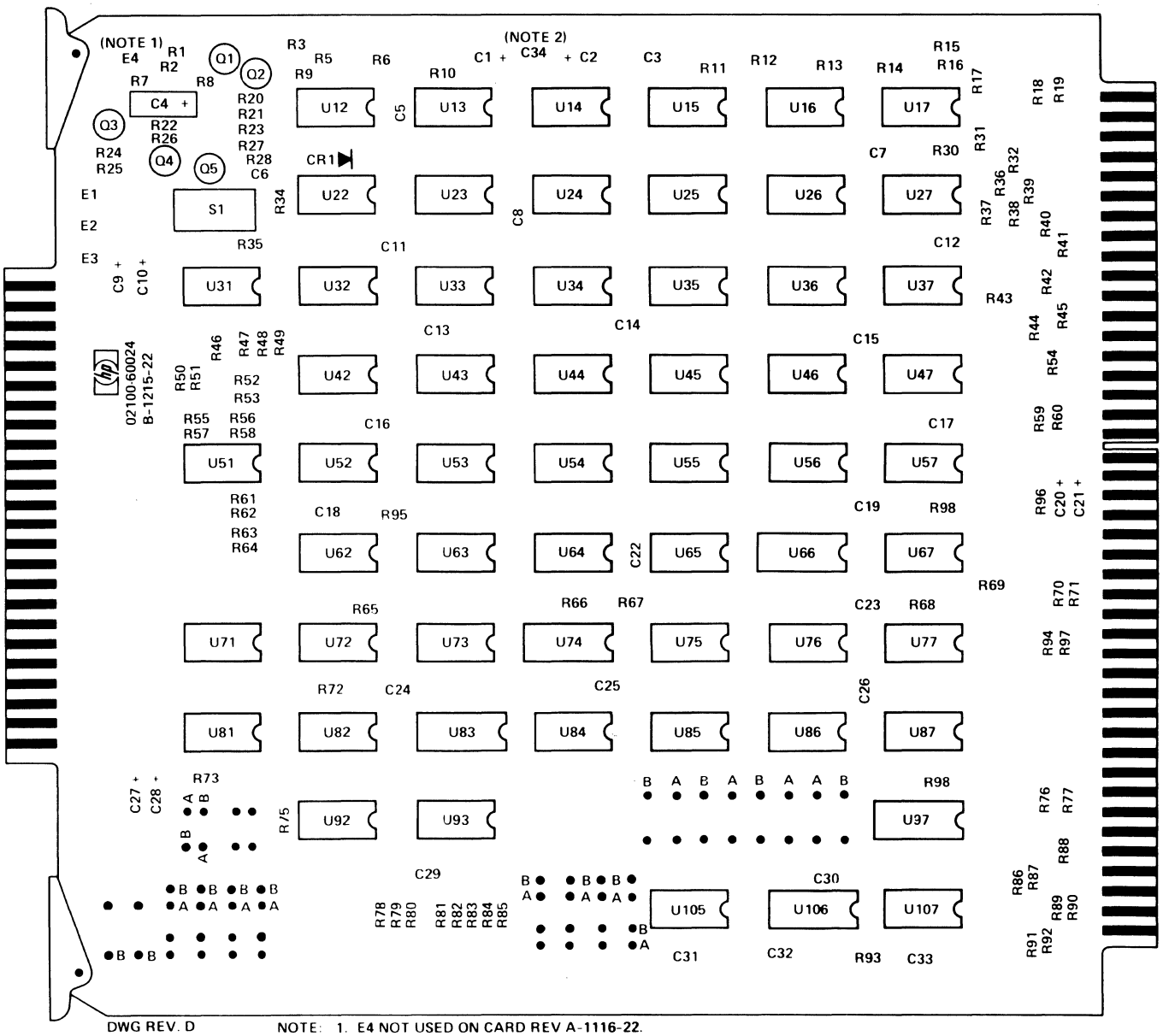

DWG REV. D

NOTE: 1. E4 NOT USED ON CARD REV A-1116-22.

2. C34 NOT USED ON CARD REV A-1116-22 AND B-1144-22.

Figure 2-8. A7 I/O Control Card, Parts Location Diagram

Table 2-9. A8 I/O Buffer Card, Replaceable Parts

Reference Designation	HP Part Number	Qty	Description	Mfr Code	Mfr Part Number
A8	02100-60007	1	I/O BUFFER CARD	28480	02100-60007
A8C1	0180-0197	9	C:FXD ELECT 2.2 UF 10% 20VDCW	56289	150D225X9020A2-DYS
A8C2	0160-2055	49	C:FXD CER 0.01 UF +80-20% 100VDCW	56289	C023F101F103ZS22-CDH
A8C3	0160-2055		C:FXD CER 0.01 UF +80-20% 100VDCW	56289	C023F101F103ZS22-CDH
A8C4	0160-2055		C:FXD CER 0.01 UF +80-20% 100VDCW	56289	C023F101F103ZS22-CDH
A8C5	0160-2055		C:FXD CER 0.01 UF +80-20% 100VDCW	56289	C023F101F103ZS22-CDH
A8C6	0160-2055		C:FXD CER 0.01 UF +80-20% 100VDCW	56289	C023F101F103ZS22-CDH
A8C7	0160-2055		C:FXD CER 0.01 UF +80-20% 100VDCW	56289	C023F101F103ZS22-CDH
A8C8	0160-2055		C:FXD CER 0.01 UF +80-20% 100VDCW	56289	C023F101F103ZS22-CDH
A8C9	0160-2055		C:FXD CER 0.01 UF +80-20% 100VDCW	56289	C023F101F103ZS22-CDH
A8C10	0160-2055		C:FXD CER 0.01 UF +80-20% 100VDCW	56289	C023F101F103ZS22-CDH
A8C11	0160-2055		C:FXD CER 0.01 UF +80-20% 100VDCW	56289	C023F101F103ZS22-CDH
A8C12	0160-2055		C:FXD CER 0.01 UF +80-20% 100VDCW	56289	C023F101F103ZS22-CDH
A8C13	0160-2055		C:FXD CER 0.01 UF +80-20% 100VDCW	56289	C023F101F103ZS22-CDH
A8C14	0160-2055		C:FXD CER 0.01 UF +80-20% 100VDCW	56289	C023F101F103ZS22-CDH
A8C15	0160-2055		C:FXD CER 0.01 UF +80-20% 100VDCW	56289	C023F101F103ZS22-CDH
A8C16	0160-2055		C:FXD CER 0.01 UF +80-20% 100VDCW	56289	C023F101F103ZS22-CDH
A8C17	0160-2055		C:FXD CER 0.01 UF +80-20% 100VDCW	56289	C023F101F103ZS22-CDH
A8C18	0160-2055		C:FXD CER 0.01 UF +80-20% 100VDCW	56289	C023F101F103ZS22-CDH
A8C19	0160-2055		C:FXD CER 0.01 UF +80-20% 100VDCW	56289	C023F101F103ZS22-CDH
A8C20	0160-2055		C:FXD CER 0.01 UF +80-20% 100VDCW	56289	C023F101F103ZS22-CDH
A8C21	0180-0197		C:FXD ELECT 2.2 UF 10% 20VDCW	56289	150D225X9020A2-DYS
A8C22	0180-0197		C:FXD ELECT 2.2 UF 10% 20VDCW	56289	150D225X9020A2-DYS
A8C23	0160-2055		C:FXD CER 0.01 UF +80-20% 100VDCW	56289	C023F101F103ZS22-CDH
A8C24	0160-2055		C:FXD CER 0.01 UF +80-20% 100VDCW	56289	C023F101F103ZS22-CDH
A8C25	0160-2055		C:FXD CER 0.01 UF +80-20% 100VDCW	56289	C023F101F103ZS22-CDH
A8C26	0160-2055		C:FXD CER 0.01 UF +80-20% 100VDCW	56289	C023F101F103ZS22-CDH
A8C27	0160-2055		C:FXD CER 0.01 UF +80-20% 100VDCW	56289	C023F101F103ZS22-CDH
A8C28	0160-2055		C:FXD CER 0.01 UF +80-20% 100VDCW	56289	C023F101F103ZS22-CDH
A8C29	0160-2055		C:FXD CER 0.01 UF +80-20% 100VDCW	56289	C023F101F103ZS22-CDH
A8C30	0160-2055		C:FXD CER 0.01 UF +80-20% 100VDCW	56289	C023F101F103ZS22-CDH
A8C31	0160-2055		C:FXD CER 0.01 UF +80-20% 100VDCW	56289	C023F101F103ZS22-CDH
A8C32	0160-2055		C:FXD CER 0.01 UF +80-20% 100VDCW	56289	C023F101F103ZS22-CDH
A8C33	0160-2055		C:FXD CER 0.01 UF +80-20% 100VDCW	56289	C023F101F103ZS22-CDH
A8C34	0160-2055		C:FXD CER 0.01 UF +80-20% 100VDCW	56289	C023F101F103ZS22-CDH
A8C35	0180-0197		C:FXD ELECT 2.2 UF 10% 20VDCW	56289	150D225X9020A2-DYS
A8C36	0180-0197		C:FXD ELECT 2.2 UF 10% 20VDCW	56289	150D225X9020A2-DYS
A8C37	0160-2055		C:FXD CER 0.01 UF +80-20% 100VDCW	56289	C023F101F103ZS22-CDH
A8C38	0160-2055		C:FXD CER 0.01 UF +80-20% 100VDCW	56289	C023F101F103ZS22-CDH
A8C39	0160-2055		C:FXD CER 0.01 UF +80-20% 100VDCW	56289	C023F101F103ZS22-CDH
A8C40	0160-2055		C:FXD CER 0.01 UF +80-20% 100VDCW	56289	C023F101F103ZS22-CDH
A8C41	0160-2055		C:FXD CER 0.01 UF +80-20% 100VDCW	56289	C023F101F103ZS22-CDH
A8C42	0160-2055		C:FXD CER 0.01 UF +80-20% 100VDCW	56289	C023F101F103ZS22-CDH
A8C43	0160-2055		C:FXD CER 0.01 UF +80-20% 100VDCW	56289	C023F101F103ZS22-CDH
A8C44	0180-0197		C:FXD ELECT 2.2 UF 10% 20VDCW	56289	150D225X9020A2-DYS
A8C45	0180-0197		C:FXD ELECT 2.2 UF 10% 20VDCW	56289	150D225X9020A2-DYS
A8C46	0160-2055		C:FXD CER 0.01 UF +80-20% 100VDCW	56289	C023F101F103ZS22-CDH
A8C47	0160-2055		C:FXD CER 0.01 UF +80-20% 100VDCW	56289	C023F101F103ZS22-CDH
A8C48	0160-2055		C:FXD CER 0.01 UF +80-20% 100VDCW	56289	C023F101F103ZS22-CDH
A8C49	0160-2055		C:FXD CER 0.01 UF +80-20% 100VDCW	56289	C023F101F103ZS22-CDH
A8C50	0160-2055		C:FXD CER 0.01 UF +80-20% 100VDCW	56289	C023F101F103ZS22-CDH
A8C51	0160-2055		C:FXD CER 0.01 UF +80-20% 100VDCW	56289	C023F101F103ZS22-CDH
A8C52	0160-2055		C:FXD CER 0.01 UF +80-20% 100VDCW	56289	C023F101F103ZS22-CDH
A8C53	0180-0197		C:FXD ELECT 2.2 UF 10% 20VDCW	56289	150D225X9020A2-DYS
A8C54	0180-0197		C:FXD ELECT 2.2 UF 10% 20VDCW	56289	150D225X9020A2-DYS
A8C55	0160-2055		C:FXD CER 0.01 UF +80-20% 100VDCW	56289	C023F101F103ZS22-CDH
A8C56	0160-2055		C:FXD CER 0.01 UF +80-20% 100VDCW	56289	C023F101F103ZS22-CDH
A8C57	0160-2055		C:FXD CER 0.01 UF +80-20% 100VDCW	56289	C023F101F103ZS22-CDH
A8C58	0160-2055		C:FXD CER 0.01 UF +80-20% 100VDCW	56289	C023F101F103ZS22-CDH
A8E1	0360-0294	5	TERMINAL:SOLDER POINT	28480	0360-0294
A8E2	0360-0294		TERMINAL:SOLDER POINT	28480	0360-0294
A8E3	0360-0294		TERMINAL:SOLDER POINT	28480	0360-0294
A8E4	0360-0294		TERMINAL:SOLDER POINT	28480	0360-0294
A8E5	0360-0294		TERMINAL:SOLDER POINT	28480	0360-0294
A8R1	0698-3443	1	R:FXD MET FLM 287 OHM 1% 1/8W	28480	0698-3443
A8R2	0698-3442	23	R:FXD MET FLM 237 OHM 1% 1/8W	28480	0698-3442
A8R3	0698-3442		R:FXD MET FLM 237 OHM 1% 1/8W	28480	0698-3442
A8R4	0698-3442		R:FXD MET FLM 237 OHM 1% 1/8W	28480	0698-3442
A8R5	0698-3442		R:FXD MET FLM 237 OHM 1% 1/8W	28480	0698-3442
A8R6	0698-3442		R:FXD MET FLM 237 OHM 1% 1/8W	28480	0698-3442
A8R7	0698-3442		R:FXD MET FLM 237 OHM 1% 1/8W	28480	0698-3442
A8R8	0698-3442		R:FXD MET FLM 237 OHM 1% 1/8W	28480	0698-3442
A8R9	0698-3442		R:FXD MET FLM 237 OHM 1% 1/8W	28480	0698-3442
A8R10	0698-3442		R:FXD MET FLM 237 OHM 1% 1/8W	28480	0698-3442
A8R11	0698-3442		R:FXD MET FLM 237 OHM 1% 1/8W	28480	0698-3442

Table 2-9. A8 I/O Buffer Card, Replaceable Parts (Continued)

Reference Designation	HP Part Number	Qty	Description	Mfr Code	Mfr Part Number
A8R12	0698-3442		R:FXD MET FLM 237 OHM 1% 1/8W	28480	0698-3442
A8R13	0698-3442		R:FXD MET FLM 237 OHM 1% 1/8W	28480	0698-3442
A8R14	0757-0280	9	R:FXD MET FLM 1K OHM 1% 1/8W	28480	0757-0280
A8R15	0757-0416	10	R:FXD MET FLM 511 OHM 1% 1/8W	28480	0757-0416
A8R16	0698-3442		R:FXD MET FLM 237 OHM 1% 1/8W	28480	0698-3442
A8R17	0698-3442		R:FXD MET FLM 237 OHM 1% 1/8W	28480	0698-3442
A8R18	0698-3442		R:FXD MET FLM 237 OHM 1% 1/8W	28480	0698-3442
A8R19	0698-3442		R:FXD MET FLM 237 OHM 1% 1/8W	28480	0698-3442
A8R20	0757-0416		R:FXD MET FLM 511 OHM 1% 1/8W	28490	0757-0416
A8R21	0757-0280		R:FXD MET FLM 1K OHM 1% 1/8W	28480	0757-0280
A8R22	0757-0416		R:FXD MET FLM 511 OHM 1% 1/8W	28480	0757-0416
A8R23	0757-0280		R:FXD MET FLM 1K OHM 1% 1/8W	28480	0757-0280
A8R24	0757-0280		R:FXD MET FLM 1K OHM 1% 1/8W	28480	0757-0280
A8R25	0757-0416		R:FXD MET FLM 511 OHM 1% 1/8W	28480	0757-0416
A8R26	0698-3442		R:FXD MET FLM 237 OHM 1% 1/8W	28480	0699-3442
A8R27	0757-0416		R:FXD MET FLM 511 OHM 1% 1/8W	28480	0757-0416
A8R28	0698-3442		R:FXD MET FLM 237 OHM 1% 1/8W	28480	0698-3442
A8R29	0757-0416		R:FXD MET FLM 511 OHM 1% 1/8W	28480	0757-0416
A8R30	0757-0416		R:FXD MET FLM 511 OHM 1% 1/8W	28480	0757-0416
A8R31	0757-0280		R:FXD MET FLM 1K OHM 1% 1/8W	28480	0757-0280
A8R32	0698-3444	4	R:FXD MET FLM 316 OHM 1% 1/8W	28480	0698-3444
A8R33	0757-0280		R:FXD MET FLM 1K OHM 1% 1/8W	28480	0757-0280
A8R34	0698-3442		R:FXD MET FLM 237 OHM 1% 1/8W	28480	0698-3442
A8R35	0698-3442		R:FXD MET FLM 237 OHM 1% 1/8W	28480	0698-3442
A8R36	0698-3446	1	R:FXD MET FLM 383 OHM 1% 1/8W	28480	0698-3446
A8R37	0698-3442		R:FXD MET FLM 237 OHM 1% 1/8W	28480	0698-3442
A8R38	0698-3442		R:FXD MET FLM 237 OHM 1% 1/8W	28480	0698-3442
A8R39	0757-0280		R:FXD MET FLM 1K OHM 1% 1/8W	28480	0757-0280
A8R40	0698-3444		R:FXD MET FLM 316 OHM 1% 1/8W	28480	0698-3444
A8R41	0757-0280		R:FXD MET FLM 1K OHM 1% 1/8W	28480	0757-0280
A8R42	0757-0416		R:FXD MET FLM 511 OHM 1% 1/8W	28480	0757-0416
A8R43	0698-3442		R:FXD MET FLM 237 OHM 1% 1/8W	28480	0698-3442
A8R44	0698-3444		R:FXD MET FLM 316 OHM 1% 1/8W	28480	0698-3444
A8R45	0698-3444		R:FXD MET FLM 316 OHM 1% 1/8W	28480	0698-3444
A8R46	0698-3441	2	R:FXD MET FLM 215 OHM 1% 1/8W	28480	0698-3441
A8R47	0757-0418	1	R:FXD MET FLM 619 OHM 1% 1/8W	28480	0757-0418
A8R48	0757-0280		R:FXD MET FLM 1K OHM 1% 1/8W	28480	0757-0280
A8R49	0757-0416		R:FXD MET FLM 511 OHM 1% 1/8W	28480	0757-0416
A8R50	0757-0416		R:FXD MET FLM 511 OHM 1% 1/8W	28480	0757-0416
A8R51	0698-3441		R:FXD MET FLM 215 OHM 1% 1/8W	28490	0698-3441
A8R52(NOTE 2)	0757-0280	1	R: FXD MET FLM 1K OHM 1% 1/8W	28480	0757-0280
A8S1	3101-1213	2	SWITCH:TOGGLE DPST-DB SUB-MINIATURE	81640	T8001
A8S2	3101-1213		SWITCH:TOGGLE DPST-DB SUB-MINIATURE	81640	T8001
A8U11	1820-0186	34	IC:CTL DUAL 2-INPT AND GATE	07263	U6A985649X
A8U12	1820-0186		IC:CTL DUAL 2-INPT AND GATE	07263	U6A985649X
A8U13	1820-0186		IC:CTL DUAL 2-INPT AND GATE	07263	U6A985649X
A8U14	1820-0186		IC:CTL DUAL 2-INPT AND GATE	07263	U6A985649X
A8U15	1820-0186		IC:CTL DUAL 2-INPT AND GATE	07263	U6A985649X
A8U16	1820-0186		IC:CTL DUAL 2-INPT AND GATE	07263	U6A985649X
A8U17	1820-0186		IC:CTL DUAL 2-INPT AND GATE	07263	U6A985649X
A8U21	1820-0301	4	IC:TTL QUAD BI-STABLE D-LATCH	01295	SN7475N
A8U22	1820-0186		IC:CTL DUAL 2-INPT AND GATE	07263	U6A985649X
A8U23	1820-0186		IC:CTL DUAL 2-INPT AND GATE	07263	U6A985649X
A8U24	1820-0301		IC:TTL QUAD BI-STABLE D-LATCH	01295	SN7475N
A8U25	1820-0186		IC:CTL DUAL 2-INPT AND GATE	07263	U6A985649X
A8U26	1820-0186		IC:CTL DUAL 2-INPT AND GATE	07263	U6A985649X
A8U31	1820-0186		IC:CTL DUAL 2-INPT AND GATE	07263	U6A985649X
A8U32	1820-0186		IC:CTL DUAL 2-INPT AND GATE	07263	U6A985649X
A8U33	1820-0186		IC:CTL DUAL 2-INPT AND GATE	07263	U6A985649X
A8U34	1820-0186		IC:CTL DUAL 2-INPT AND GATE	07263	U6A985649X
A8U35	1820-0186		IC:CTL DUAL 2-INPT AND GATE	07263	U6A985649X
A8U36	1820-0186		IC:CTL DUAL 2-INPT AND GATE	07263	U6A985649X
A8U37	1820-0186		IC:CTL DUAL 2-INPT AND GATE	07263	U6A985649X
A8U41	1820-0301		IC:TTL QUAD BI-STABLE D-LATCH	01295	SN7475N
A8U42	1820-0186		IC:CTL DUAL 2-INPT AND GATE	07263	U6A985649X
A8U43	1820-0186		IC:CTL DUAL 2-INPT AND GATE	07263	U6A985649X
A8U44	1820-0301		IC:TTL QUAD BI-STABLE D-LATCH	01295	SN7475N
A8U45	1820-0186		IC:CTL DUAL 2-INPT AND GATE	07263	U6A985649X
A8U46	1820-0186		IC:CTL DUAL 2-INPT AND GATE	07263	U6A985649X
A8U51	1820-0186		IC:CTL DUAL 2-INPT AND GATE	07263	U6A985649X
A8U52	1820-0186		IC:CTL DUAL 2-INPT AND GATE	07263	U6A985649X
A8U53	1820-0186		IC:CTL DUAL 2-INPT AND GATE	07263	U6A985649X
A8U54	1820-0186		IC:CTL DUAL 2-INPT AND GATE	07263	U6A985649X
A8U55	1820-0141	4	IC:TTL QUAD 2-INPT AND GATE	04713	MC3001P
A8U56	1820-0239	1	IC:TTL QUAD 2-INPT NOR GATE	28480	1820-0239
A8U57	1820-0437	1	IC:TTL QUAD D F/F	04713	MC4015P

Table 2-9. A8 I/O Buffer Card, Replaceable Parts (Continued)

Reference Designation	HP Part Number	Qty	Description	Mfr Code	Mfr Part Number
A8U61	1820-0141		IC:TTL QUAD 2-INPT AND GATE	04713	MC3001P
A8U62	1820-0609	3	IC:TTL DUAL J-K F/F W/COM. CLK & RESET	04713	MC3061P
A8U63	1820-0140	2	IC:TTL DUAL 4-INPT AND BUFFER	04713	MC3026P
A8U64	1820-0424	2	IC:TTL HS HEX INVERTER	04713	SN74H04N
A8U65	1820-0608	1	IC:TTL 1 OF DECODER W/ENABLE	04713	MC4006P
A8U66	1820-0376	1	IC:TTL HS DUAL 4-INPT NAND BUFFER	01295	SN74H40N
A8U67	1820-0512	1	IC:TTL DUAL D F/F	01295	SN74H74N
A8U71	1820-0609		IC:TTL DUAL J-K F/F W/COM. CLK & RESET	04713	MC3061P
A8U72	1820-0371	1	IC:TTL HS TRIPLE 3-INPT NAND GATE	01295	SN74H10N
A8U73	1820-0370	3	IC:TTL HS QUAD 2-INPT NAND GATE	01295	SN74H00N
A8U74	1820-0372	2	IC:TTL TRIPLE 3-INPT AND GATE	28480	1820-0372
A8U75(NOTE 1)	1820-0451	4	IC:TTL DUAL J-K F/F	04713	MC3062P
A8U76(NOTE 1)	1820-0451		IC:TTL DUAL J-K F/F	04713	MC3062P
A8U81	1820-0370		IC:TTL HS QUAD 2-INPT NAND GATE	01295	SN74H00N
A8U82(NOTE 1)	1820-0451		IC:TTL DUAL J-K F/F	04713	MC3062P
A8U83	1820-0141		IC:TTL QUAD 2-INPT AND GATE	04713	MC3001P
A8U85	1820-0186		IC:CTL DUAL 2-INPT AND GATE	07263	U6A985649X
A8U86	1820-0186		IC:CTL DUAL 2-INPT AND GATE	07263	U6A985649X
A8U87	1820-0186		IC:CTL DUAL 2-INPT AND GATE	07263	U6A985649X
A8U91	1820-0140		IC:TTL DUAL 4-INPT AND BUFFER	04713	MC3026P
A8U92	1820-0372		IC:TTL TRIPLE 3-INPT AND GATE	28480	1820-0372
A8U93(NOTE 1)	1820-0451		IC:TTL DUAL J-K F/F	04713	MC3062P
A8U94	1820-0424		IC:TTL HS HEX INVERTER	04713	SN74H04N
A8U95	1820-0186		IC:CTL DUAL 2-INPT AND GATE	07263	U6A985649X
A8U96	1820-0186		IC:CTL DUAL 2-INPT AND GATE	07263	U6A985649X
A8U97	1820-0186		IC:CTL DUAL 2-INPT AND GATE	07263	U6A985649X
A8U102	1820-0370		IC:TTL HS QUAD 2-INPT NAND GATE	01295	SN74H00N
A8U103	1820-0609		IC:TTL DUAL J-K F/F W/COM. CLK & RESET	04713	MC3061P
A8U104	1820-0485		IC:CTL HEX LEVEL RESTORER	07263	U6B981649X
A8U105	1820-0186		IC:CTL DUAL 2-INPT AND GATE	07263	U6A985649X
A8U106	1820-0141		IC:TTL QUAD 2-INPT AND GATE	04713	MC3001P
A8U107	1820-0186		IC:CTL DUAL 2-INPT AND GATE	07263	U6A985649X
A8W1	8159-0005		JUMPER WIRE	28480	8159-0005
A8W2	8159-0005		JUMPER WIRE	28480	8159-0005

NOTES: 1. Part no. 1820-0695 used on some cards; the two parts are interchangeable.
2. A8R52, A8W1, and A8W2 first used on card rev. 1216.

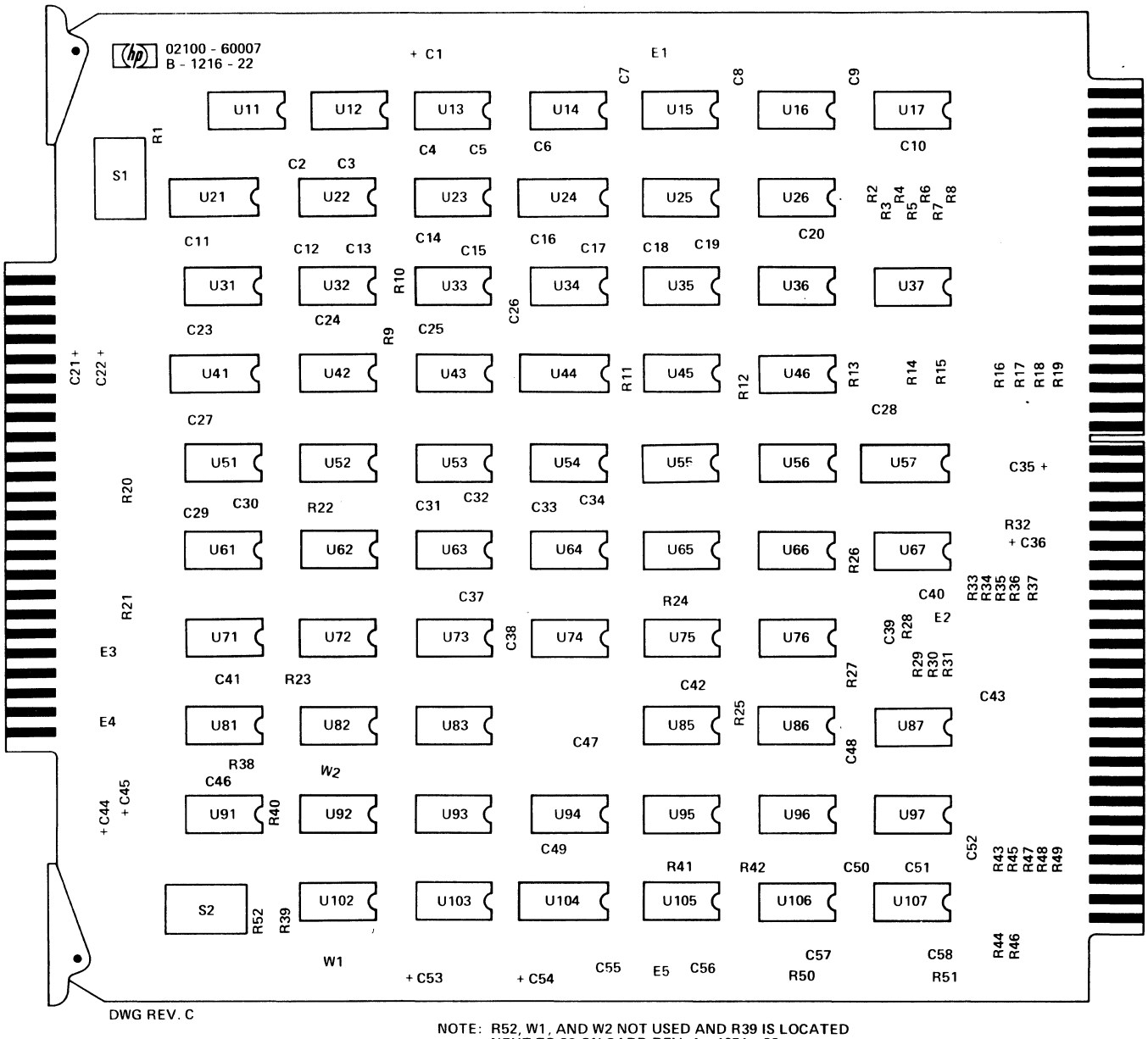

NOTE: R52, W1, AND W2 NOT USED AND R39 IS LOCATED NEXT TO S2 ON CARD REV. A - 1051 - 22.

Figure 2-9. A8 I/O Buffer Card, Parts Location Diagram

Table 2-10. A9 Direct Memory Access Card (Accessory), Replaceable Parts

Reference Designation	HP Part Number	Qty	Description	Mfr Code	Mfr Part Number
A9	12895-60001	1	DIRECT MEMORY ACCESS CARD	28480	12895-60001
A9C1	0160-2055	21	C:FXD CER 0.01 UF +80-20% 100VDCW	56289	C023F101F103ZS22-CDH
A9C2	0180-0197	10	C:FXD ELECT 2.2 UF 10% 20VDCW	56289	150D225X9020A2-DYS
A9C3	0180-0197		C:FXD ELECT 2.2 UF 10% 20VDCW	56289	150D225X9020A2-DYS
A9C4	0160-2055		C:FXD CER 0.01 UF +80-20% 100VDCW	56289	C023F101F103ZS22-CDH
A9C5	0180-0197		C:FXD ELECT 2.2 UF 10% 20VDCW	56289	150D225X9020A2-DYS
A9C6	0160-2055		C:FXD CER 0.01 UF +80-20% 100VDCW	56289	C023F101F103ZS22-CDH
A9C7	0160-2055		C:FXD CER 0.01 UF +80-20% 100VDCW	56289	C023F101F103ZS22-CDH
A9C8	0180-0197		C:FXD ELECT 2.2 UF 10% 20VDCW	56289	150D225X9020A2-DYS
A9C9	0160-2055		C:FXD CER 0.01 UF +80-20% 100VDCW	56289	C023F101F103ZS22-CDH
A9C10	0160-2055		C:FXD CER 0.01 UF +80-20% 100VDCW	56289	C023F101F103ZS22-CDH
A9C11	0160-2055		C:FXD CER 0.01 UF +80-20% 100VDCW	56289	C023F101F103ZS22-CDH
A9C12	0160-2055		C:FXD CER 0.01 UF +80-20% 100VDCW	56289	C023F101F103ZS22-CDH
A9C13	0160-2055		C:FXD CER 0.01 UF +80-20% 100VDCW	56289	C023F101F103ZS22-CDH
A9C14	0160-2055		C:FXD CER 0.01 UF +80-20% 100VDCW	56289	C023F101F103ZS22-CDH
A9C15	0160-2055		C:FXD CER 0.01 UF +80-20% 100VDCW	56289	C023F101F103ZS22-CDH
A9C16	0180-0197		C:FXD ELECT 2.2 UF 10% 20VDCW	56289	150D225X9020A2-DYS
A9C17	0160-2055		C:FXD CER 0.01 UF +80-20% 100VDCW	56289	C023F101F103ZS22-CDH
A9C18	0160-2055		C:FXD CER 0.01 UF +80-20% 100VDCW	56289	C023F101F103ZS22-CDH
A9C19	0180-0197		C:FXD ELECT 2.2 UF 10% 20VDCW	56289	150D225X9020A2-DYS
A9C20	0160-2055		C:FXD CER 0.01 UF +80-20% 100VDCW	56289	C023F101F103ZS22-CDH
A9C21	0180-0197		C:FXD ELECT 2.2 UF 10% 20VDCW	56289	150D225X9020A2-DYS
A9C22	0160-2055		C:FXD CER 0.01 UF +80-20% 100VDCW	56289	C023F101F103ZS22-CDH
A9C23	0180-0197		C:FXD ELECT 2.2 UF 10% 20VDCW	56289	150D225X9020A2-DYS
A9C24	0160-2055		C:FXD CER 0.01 UF +80-20% 100VDCW	56289	C023F101F103ZS22-CDH
A9C25	0160-2055		C:FXD CER 0.01 UF +80-20% 100VDCW	56289	C023F101F103ZS22-CDH
A9C26	0160-2055		C:FXD CER 0.01 UF +80-20% 100VDCW	56289	C023F101F103ZS22-CDH
A9C27	0160-2055		C:FXD CER 0.01 UF +80-20% 100VDCW	56289	C023F101F103ZS22-CDH
A9C28	0180-0197		C:FXD ELECT 2.2 UF 10% 20VDCW	56289	150D225X9020A2-DYS
A9C29	0180-0197		C:FXD ELECT 2.2 UF 10% 20VDCW	56289	150D225X9020A2-DYS
A9C30	0160-2055		C:FXD CER 0.01 UF +80-20% 100VDCW	56289	C023F101F103ZS22-CDH
A9C31	0160-2055		C:FXD CER 0.01 UF +80-20% 100VDCW	56289	C023F101F103ZS22-CDH
A9R1	0757-0407	17	R:FXD MET FLM 200 OHM 1% 1/8W	28480	0757-0407
A9R2	0757-0407		R:FXD MET FLM 200 OHM 1% 1/8W	28480	0757-0407
A9R3	0757-0407		R:FXD MET FLM 200 OHM 1% 1/8W	28480	0757-0407
A9R4	0757-0407		R:FXD MET FLM 200 OHM 1% 1/8W	28480	0757-0407
A9R5	0757-0407		R:FXD MET FLM 200 OHM 1% 1/8W	28480	0757-0407
A9R6	0757-0407		R:FXD MET FLM 200 OHM 1% 1/8W	28480	0757-0407
A9R7	0757-0407		R:FXD MET FLM 200 OHM 1% 1/8W	28480	0757-0407
A9R8	0757-0407		R:FXD MET FLM 200 OHM 1% 1/8W	28480	0757-0407
A9R9	0757-0407		R:FXD MET FLM 200 OHM 1% 1/8W	28480	0757-0407
A9R10	0757-0407		R:FXD MET FLM 200 OHM 1% 1/8W	28480	0757-0407
A9R11	0757-0407		R:FXD MET FLM 200 OHM 1% 1/8W	28480	0757-0407
A9R12	0698-3439	1	R:FXD MET FLM 178 OHM 1% 1/8W	28480	0698-3439
A9R13	0757-0280	7	R:FXD MET FLM 1K OHM 1% 1/8W	28480	0757-0280
A9R14	0757-0407		R:FXD MET FLM 200 OHM 1% 1/8W	28480	0757-0407
A9R15	0757-0407		R:FXD MET FLM 200 OHM 1% 1/8W	28480	0757-0407
A9R16	0757-0280		R:FXD MET FLM 1K OHM 1% 1/8W	28480	0757-0280
A9R17	0757-0407		R:FXD MET FLM 200 OHM 1% 1/8W	28480	0757-0407
A9R18	0757-0407		R:FXD MET FLM 200 OHM 1% 1/8W	28480	0757-0407
A9R19	0757-1094	2	R:FXD MET FLM 1.47K OHM 1% 1/8W	28480	0757-1094
A9R20	0757-0416	9	R:FXD MET FLM 511 OHM 1% 1/8W	28480	0757-0416
A9R21	0757-0416		R:FXD MET FLM 511 OHM 1% 1/8W	28480	0757-0416
A9R22	0757-0280		R:FXD MET FLM 1K OHM 1% 1/8W	28480	0757-0280
A9R23	0757-0416		R:FXD MET FLM 511 OHM 1% 1/8W	28480	0757-0416
A9R24	0757-0416		R:FXD MET FLM 511 OHM 1% 1/8W	28480	0757-0416
A9R25	0757-0418	1	R:FXD MET FLM 619 OHM 1% 1/8W	28480	0757-0418
A9R26	0757-0407		R:FXD MET FLM 200 OHM 1% 1/8W	28480	0757-0407
A9R27	0757-0416		R:FXD MET FLM 511 OHM 1% 1/8W	28480	0757-0416
A9R28	0757-0416		R:FXD MET FLM 511 OHM 1% 1/8W	28480	0757-0416
A9R29	0698-3446	1	R:FXD MET FLM 383 OHM 1% 1/8W	28480	0698-3446
A9R30	0757-1094		R:FXD MET FLM 1.47K OHM 1% 1/8W	28480	0757-1094
A9R31	0757-0280		R:FXD MET FLM 1K OHM 1% 1/8W	28480	0757-0280
A9R32	0757-0280		R:FXD MET FLM 1K OHM 1% 1/8W	28480	0757-0280
A9R33	0757-0280		R:FXD MET FLM 1K OHM 1% 1/8W	28480	0757-0280
A9R34	0757-0416		R:FXD MET FLM 511 OHM 1% 1/8W	28480	0757-0416
A9R35	0757-0416		R:FXD MET FLM 511 OHM 1% 1/8W	28480	0757-0416
A9R36	0757-0280		R:FXD MET FLM 1K OHM 1% 1/8W	28480	0757-0280
A9R37	0757-0407		R:FXD MET FLM 200 OHM 1% 1/8W	28480	0757-0407
A9R38	0757-0416		R:FXD MET FLM 511 OHM 1% 1/8W	28480	0757-0416
A9R39	1810-0080	2	R:NETWORK 7 X 500 OHM 5% 0.15W EACH	28480	1810-0080
A9R40	1810-0080		R:NETWORK 7 X 500 OHM 5% 0.15W EACH	28480	1810-0080
A9R41	0698-3443	2	R:FXD MET FLM 287 OHM 1% 1/8W	28480	0698-3443
A9R42	0698-3443		R:FXD MET FLM 287 OHM 1% 1/8W	28480	0698-3443
A9U11	1820-0233	16	IC:TTL SYNUP-ON 4-BIT BINARY COUNTER	01295	SN74193N

Table 2-10. A9 Direct Memory Access Card (Accessory), Replaceable Parts (Continued)

Reference Designation	HP Part Number	Qty	Description	Mfr Code	Mfr Part Number
A9U12	1820-0485	10	IC:CTL HEX LEVEL RESTORER	07263	U6B981649X
A9U13	1820-0233		IC:TTL SYNUP-ON 4-BIT BINARY COUNTER	01295	SN74193N
A9U14	1820-0485		IC:CTL HEX LEVEL RESTORER	07263	U6B981649X
A9U15	1820-0233		IC:TTL SYNUP-ON 4-BIT BINARY COUNTER	01295	SN74193N
A9U16	1820-0485		IC:CTL HEX LEVEL RESTORER	07263	U6B981649X
A9U17	1820-0233		IC:TTL SYNUP-ON 4-BIT BINARY COUNTER	01295	SN74193N
A9U21	1820-0233		IC:TTL SYNUP-ON 4-BIT BINARY COUNTER	01295	SN74193N
A9U22	1820-0616	8	IC:TTL 4-BIT 2-INPT MULTIPLEXER	07263	U78932259X
A9U23	1820-0233		IC:TTL SYNUP-ON 4-BIT BINARY COUNTER	01295	SN74193N
A9U24	1820-0616		IC:TTL 4-BIT 2-INPT MULTIPLEXER	07263	U78932259X
A9U25	1820-0233		IC:TTL SYNUP-ON 4-BIT BINARY COUNTER	01295	SN74193N
A9U26	1820-0616		IC:TTL 4-BIT 2-INPT MULTIPLEXER	07263	U78932259X
A9U27	1820-0233		IC:TTL SYNUP-ON 4-BIT BINARY COUNTER	01295	SN74193N
A9U31	1820-0233		IC:TTL SYNUP-ON 4-BIT BINARY COUNTER	01295	SN74193N
A9U32	1820-0485		IC:CTL HEX LEVEL RESTORER	07263	U6B981649X
A9U33	1820-0233		IC:TTL SYNUP-ON 4-BIT BINARY COUNTER	01295	SN74193N
A9U34	1820-0485		IC:CTL HEX LEVEL RESTORER	07263	U6B981649X
A9U35	1820-0233		IC:TTL SYNUP-ON 4-BIT BINARY COUNTER	01295	SN74193N
A9U36	1820-0485		IC:CTL HEX LEVEL RESTORER	07263	U6B981649X
A9U37	1820-0233		IC:TTL SYNUP-ON 4-BIT BINARY COUNTER	01295	SN74193N
A9U41	1820-0233		IC:TTL SYNUP-ON 4-BIT BINARY COUNTER	01295	SN74193N
A9U42	1820-0616		IC:TTL 4-BIT 2-INPT MULTIPLEXER	07263	U78932259X
A9U43	1820-0233		IC:TTL SYNUP-ON 4-BIT BINARY COUNTER	01295	SN74193N
A9U44	1820-0616		IC:TTL 4-BIT 2-INPT MULTIPLEXER	07263	U78932259X
A9U45	1820-0233		IC:TTL SYNUP-ON 4-BIT BINARY COUNTER	01295	SN74193N
A9U46	1820-0616		IC:TTL 4-BIT 2-INPT MULTIPLEXER	07263	U78932259X
A9U47	1820-0233		IC:TTL SYNUP-ON 4-BIT BINARY COUNTER	01295	SN74193N
A9U51	1820-0616		IC:TTL 4-BIT 2-INPT MULTIPLEXER	07263	U78932259X
A9U52	1820-0371	6	IC:TTL HS TRIPLE 3-INPT NAND GATE	01295	SN74H10N
A9U53	1820-0371		IC:TTL HS TRIPLE 3-INPT NAND GATE	01295	SN74H10N
A9U54	1820-0186	3	IC:CTL DUAL 2-INPT AND GATE	07263	U6A985649X
A9U56	1820-0371		IC:TTL HS TRIPLE 3-INPT NAND GATE	01295	SN74H10N
A9U57	1820-0485		IC:CTL HEX LEVEL RESTORER	07263	U6B981649X
A9U61	1820-0485		IC:CTL HEX LEVEL RESTORER	07263	U6B981649X
A9U62	1820-0370	7	IC:TTL HS QUAD 2-INPT NAND GATE	01295	SN74H00N
A9U63	1820-0451	2	IC:TTL DUAL J-K F/F	04713	MC3062P
A9U65	1820-0451		IC:TTL DUAL J-K F/F	04713	MC3062P
A9U66	1820-0141	2	IC:TTL QUAD 2-INPT AND GATE	04713	MC3001P
A9U67	1820-0485		IC:CTL HEX LEVEL RESTORER	07263	U6B981649X
A9U71	1820-0616		IC:TTL 4-BIT 2-INPT MULTIPLEXER	07263	U78932259X
A9U72	1820-0605	2	IC:TTL HS QUAD 2-INPT NAND GATE	01295	SN74H01N
A9U73	1820-0370		IC:TTL HS QUAD 2-INPT NAND GATE	01295	SN74H00N
A9U75	1820-0205	1	IC:TTL QUAD 2-INPT OR GATE	28480	1820-0205
A9U76	1820-0372	3	IC:TTL TRIPLE 3-INPT AND GATE	28480	1820-0372
A9U77	1820-0372		IC:TTL TRIPLE 3-INPT AND GATE	28480	1820-0372
A9U81	1820-0485		IC:CTL HEX LEVEL RESTORER	07263	U6B981649X
A9U82	1820-0186		IC:CTL DUAL 2-INPT AND GATE	07263	U6A985649X
A9U83	1820-0186		IC:CTL DUAL 2-INPT AND GATE	07263	U6A985649X
A9U84	1820-0140	1	IC:TTL DUAL 4-INPT AND BUFFER	04713	MC3026P
A9U85	1820-0301	5	IC:TTL QUAD BI-STABLE D-LATCH	01295	SN7475N
A9U86	1820-0482	4	IC:CTL 1 OF 8 DECODER	07263	U6B983849X
A9U87	1820-0482		IC:CTL 1 OF 8 DECODER	07263	U6B983849X
A9U92	1820-0370		IC:TTL HS QUAD 2-INPT NAND GATE	01295	SN74H00N
A9U93	1820-0370		IC:TTL HS QUAD 2-INPT NAND GATE	01295	SN74H00N
A9U94	1820-0370		IC:TTL HS QUAD 2-INPT NAND GATE	01295	SN74H00N
A9U95	1820-0301		IC:TTL QUAD BI-STABLE D-LATCH	01295	SN7475N
A9U96	1820-0482		IC:CTL 1 OF 8 DECODER	07263	U6B983849X
A9U97	1820-0482		IC:CTL 1 OF 8 DECODER	07263	U6B983849X
A9U102	1820-0301		IC:TTL QUAD BI-STABLE D-LATCH	01295	SN7475N
A9U103	1820-0370		IC:TTL HS QUAD 2-INPT NAND GATE	01295	SN74H00N
A9U104	1820-0371		IC:TTL HS TRIPLE 3-INPT NAND GATE	01295	SN74H10N
A9U105	1820-0371		IC:TTL HS TRIPLE 3-INPT NAND GATE	01295	SN74H10N
A9U106	1820-0301		IC:TTL QUAD BI-STABLE D-LATCH	01295	SN7475N
A9U107	1820-0301		IC:TTL QUAD BI-STABLE D-LATCH	01295	SN7475N
A9U112	1820-0424	1	IC:TTL HS HEX INVERTER	04713	SN74H04N
A9U113	1820-0512	2	IC:TTL DUAL D F/F	01295	SN74H74N
A9U114	1820-0372		IC:TTL TRIPLE 3-INPT AND GATE	28480	1820-0372
A9U115	1820-0371		IC:TTL HS TRIPLE 3-INPT NAND GATE	01295	SN74H10N
A9U116	1820-0615	4	IC:TTL 8-INPT MULTIPLEXER W/COM.ENABLE	04713	FAIR 9312
A9U117	1820-0615		IC:TTL 8-INPT MULTIPLEXER W/COM.ENABLE	04713	FAIR 9312
A9U121	1820-0613	1	IC:HS HEX INVERTER W/OPEN COLL.	01295	SN74H05N
A9U122	1820-0141		IC:TTL QUAD 2-INPT AND GATE	04713	MC3001P
A9U123	1820-0370		IC:TTL HS QUAD 2-INPT NAND GATE	01295	SN74H00N
A9U124	1820-0512		IC:TTL DUAL D F/F	01295	SN74H74N
A9U125	1820-0605		IC:TTL HS QUAD 2-INPT NAND GATE	01295	SN74H01N

Table 2-10. A9 Direct Memory Access Card (Accessory), Replaceable Parts (Continued)

Reference Designation	HP Part Number	Qty	Description	Mfr Code	Mfr Part Number
A9U126	1820-0615		IC:TTL 8-INPT MULTIPLEXER W/COM.ENABLE	04713	FAIR 9312
A9U127	1820-0615		IC:TTL 8-INPT MULTIPLEXER W/COM.ENABLE	04713	FAIR 9312

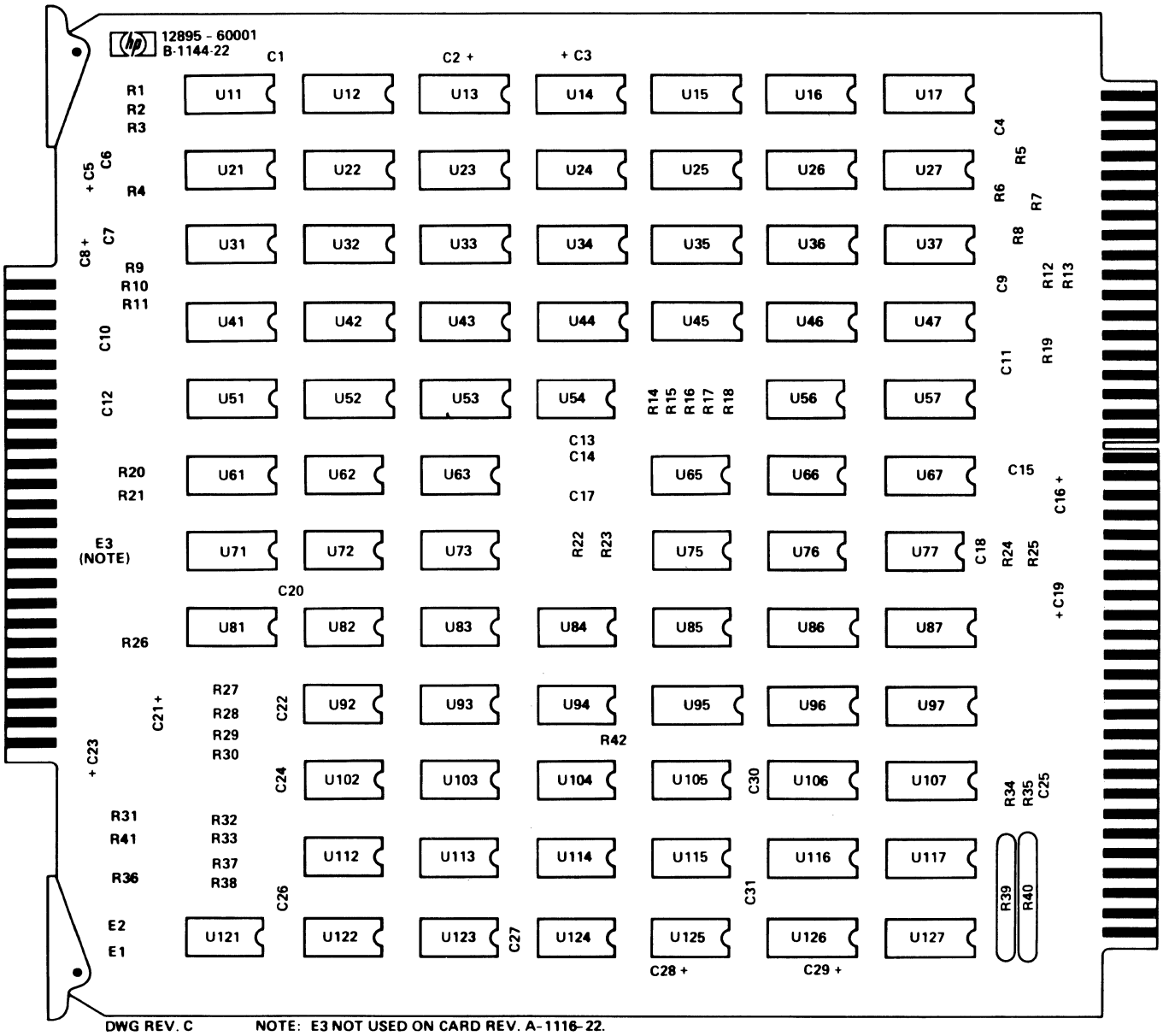

Figure 2-10. A9 Direct Memory Access Card (Accessory), Parts Location Diagram

Table 2-11. A16 I/O Terminator Card, Replaceable Parts

Reference Designation	HP Part Number	Qty	Description	Mfr Code	Mfr Part Number
A16	02100-60060	1	I/O TERMINATOR CARD	28480	02100-60060
A16R1 THRU A16R15	0683-2215	32	R:FXD COMP 220 OHM 5% 1/4W	01121	CB 2215
A16R16	0683-1025	2	R:FXD COMP 1000 OHM 5% 1/4W	01121	CB 1025
A16R17 THRU A16R21	0683-2215		R:FXD COMP 220 OHM 5% 1/4W	01121	CB 2215
A16R22	0683-1025		R:FXD COMP 1000 OHM 5% 1/4W	01121	CB 1025
A16R23 THRU A16R34	0683-2215		R:FXD COMP 220 OHM 5% 1/4W	01121	CB 2215

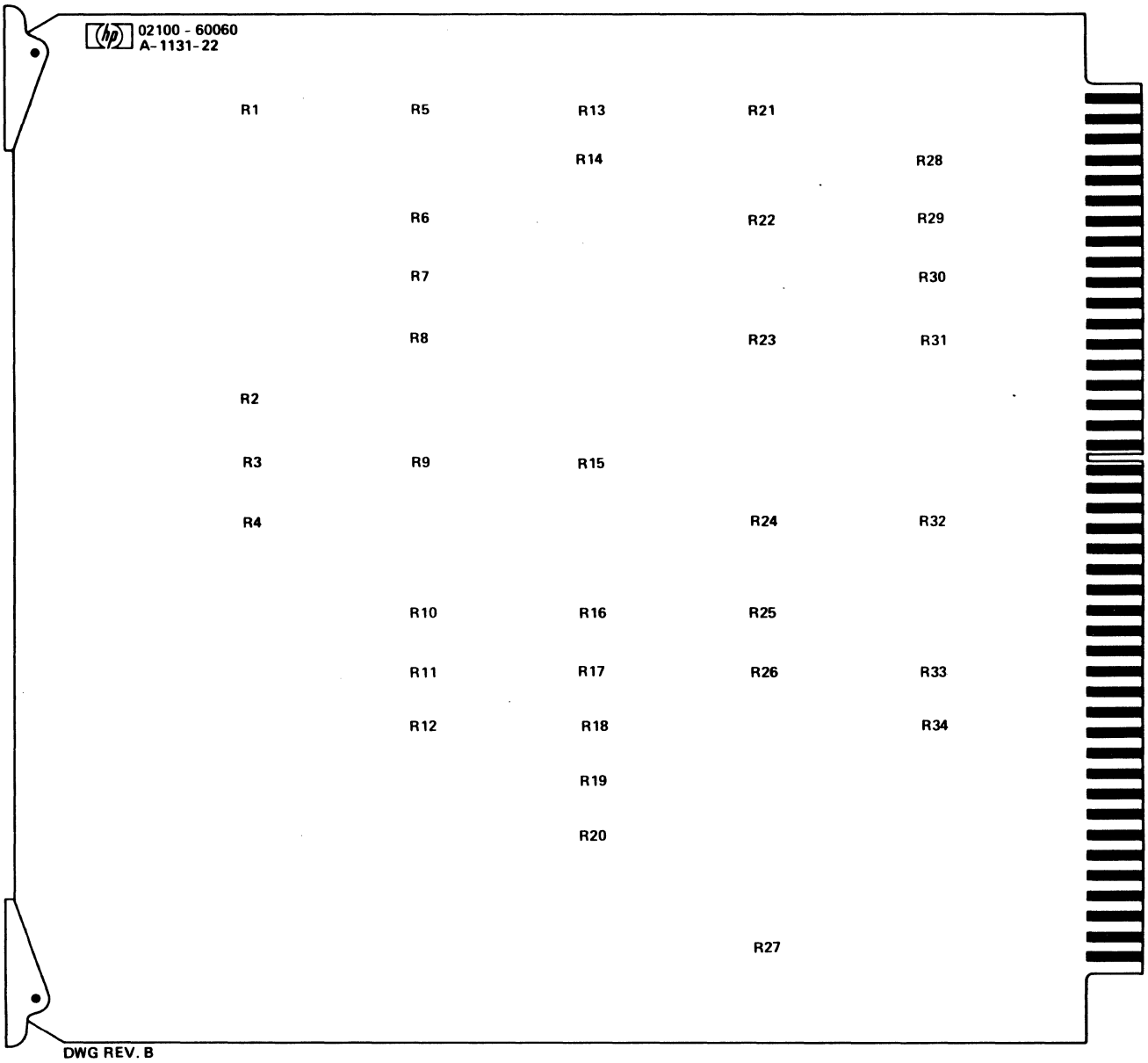

Figure 2-11. A16 I/O Terminator Card, Parts Location Diagram

Table 2-12. A101, A104, A109, A112 X-Y Driver/Switch Card, Replaceable Parts

Reference Designation	HP Part Number	Qty	Description	Mfr Code	Mfr Part Number
A101	02100-60012	4	X-Y DRIVER/SWITCH CARD	28480	02100-60012
A101C1	0160-2940	3	C:FXD MICA 470 PF 5% 300VDCW	72136	RDM15F471J3C
A101C2	0160-2940		C:FXD MICA 470 PF 5% 300VDCW	72136	RDM15F471J3C
A101C3	0160-2940		C:FXD MICA 470 PF 5% 300VDCW	72136	RDM15F471J3C
A101C5	0160-0127	8	C:FXD CER 1.0 UF 20% 25VDCW	56289	5C13CS-CML
A101C6	0160-0127		C:FXD CER 1.0 UF 20% 25VDCW	56289	5C13CS-CML
A101C7	0160-0127		C:FXD CER 1.0 UF 20% 25VDCW	56289	5C13CS-CML
A101C8	0160-0127		C:FXD CER 1.0 UF 20% 25VDCW	56289	5C13CS-CML
A101C9	0160-0127		C:FXD CER 1.0 UF 20% 25VDCW	56289	5C13CS-CML
A101C10	0160-0127		C:FXD CER 1.0 UF 20% 25VDCW	56289	5C13CS-CML
A101C11	0160-0127		C:FXD CER 1.0 UF 20% 25VDCW	56289	5C13CS-CML
A101C12	0160-0127		C:FXD CER 1.0 UF 20% 25VDCW	56289	5C13CS-CML
A101C13	0180-0161	2	C:FXD ELECT 3.3 UF 20% 35VDCW	56289	150D335X0035B2-DYS
A101C14	0180-0161		C:FXD ELECT 3.3 UF 20% 35VDCW	56289	150D335X0035B2-DYS
A101CR1 THRU A101CR96	1901-0040	96	DIODE: SILICON 30MA 30WV	07263	FDG1088
A101E1	0360-0294	6	TERMINAL:SOLDER POINT	28480	0360-0294
A101E2	0360-0294		TERMINAL:SOLDER POINT	28480	0360-0294
A101E3	0360-0294		TERMINAL:SOLDER POINT	28480	0360-0294
A101E4	0360-0294		TERMINAL:SOLDER POINT	28480	0360-0294
A101E5	0360-0294		TERMINAL:SOLDER POINT	28480	0360-0294
A101E6	0360-0294		TERMINAL:SOLDER POINT	28480	0360-0294
A101Q1	1853-0015	4	TSTR:SI PNP	80131	2N3640
A101Q2	1854-0019	4	TSTR:SI NPN	28480	1854-0019
A101Q3	1854-0019		TSTR:SI NPN	28480	1854-0019
A101Q4	1853-0015		TSTR:SI PNP	80131	2N3640
A101Q5	1853-0015		TSTR:SI PNP	80131	2N3640
A101Q6	1854-0019		TSTR:SI NPN	28480	1854-0019
A101Q7	1853-0015		TSTR:SI PNP	80131	2N3640
A101Q8	1854-0019		TSTR:SI NPN	28480	1854-0019
A101R1 THRU A101R32	0757-0280	36	R: FXD MET FLM 1K OHM 1% 1/8W	28480	0757-0280
A101R33 THRU A101R48	0698-3444	16	R:FXD MET FLM 316 OHM 1% 1/8W	28480	0698-3444
A101R49 THRU A101R116	0757-0180	68	R:FXD MET FLM 31.6 OHM 1% 1/8W	28480	0757-0180
A101R117	0757-0280		R:FXD MET FLM 1K OHM 1% 1/8W	28480	0757-0280
A101R118	0757-0280		R:FXD MET FLM 1K OHM 1% 1/8W	28480	0757-0280
A101R119	0698-3437	4	R:FXD MET FLM 133 OHM 1% 1/8W	28480	0698-3437
A101R120	0757-0421	4	R:FXD MET FLM 825 OHM 1% 1/8W	28480	0757-0421
A101R121	0757-0274	4	R:FXD MET FLM 1.21K OHM 1% 1/8W	28480	0757-0274
A101R122	0698-3437		R:FXD MET FLM 133 OHM 1% 1/8W	28480	0698-3437
A101R123	0757-0421		R:FXD MET FLM 825 OHM 1% 1/8W	28480	0757-0421
A101R124	0757-0274		R:FXD MET FLM 1.21K OHM 1% 1/8W	28480	0757-0274
A101R125	0757-0280		R:FXD MET FLM 1K OHM 1% 1/8W	28480	0757-0280
A101R126	0757-0280		R:FXD MET FLM 1K OHM 1% 1/8W	28480	0757-0280
A101R127	0757-0274		R:FXD MET FLM 1.21K OHM 1% 1/8W	28480	0757-0274
A101R128	0698-3437		R:FXD MET FLM 133 OHM 1% 1/8W	28480	0698-3437
A101R129	0757-0421		R:FXD MET FLM 825 OHM 1% 1/8W	28480	0757-0421
A101R130	0757-0274		R:FXD MET FLM 1.21K OHM 1% 1/8W	28480	0757-0274
A101R131	0698-3437		R:FXD MET FLM 133 OHM 1% 1/8W	28480	0698-3437
A101R132	0757-0421		R:FXD MET FLM 825 OHM 1% 1/8W	28480	0757-0421
A101R133	0757-1090	4	R:FXD MET FLM 261 OHM 1% 1/2W	28480	0757-1090
A101R134	0757-1090		R:FXD MET FLM 261 OHM 1% 1/2W	28480	0757-1090
A101R135	0757-1090		R:FXD MET FLM 261 OHM 1% 1/2W	28480	0757-1090
A101R156	0757-1090		R:FXD MET FLM 261 OHM 1% 1/2W	28480	0757-1090
A101R157	0811-2084	4	R;FXD WW 43 OHM 1% 5W	28480	0811-2084
A101R158	0811-2084		R;FXD WW 43 OHM 1% 5W	28480	0811-2084
A101R159	0811-2084		R;FXD WW 43 OHM 1% 5W	28480	0811-2084
A101R160	0811-2084		R;FXD WW 43 OHM 1% 5W	28480	0811-2084
A101R161 THRU A101R224	0757-0403	64	R:FXD MET FLM 121 OHM 1% 1/8W	28480	0757-0403
A101T1 THRU A101T16	9100-3130	16	TRANSFORMER:PULSE	28480	9100-3130
A101U1 THRU A101U16	1821-0006	16	TSTR:QUAD NPN NETWORK	28480	1821-0006
A101U17	1820-0482	8	IC:CTL 1 OF 8 DECODER	07263	U6B983849X
A101U18	1820-0482		IC:CTL 1 OF 8 DECODER	07263	U6B983849X
A101U19	1820-0482		IC:CTL 1 OF 8 DECODER	07263	U6B983849X
A101U20	1820-0482		IC:CTL 1 OF 8 DECODER	07263	U6B983849X
A101U21	1820-0482		IC:CTL 1 OF 8 DECODER	07263	U6B983849X
A101U22	1820-0482		IC:CTL 1 OF 8 DECODER	07263	U6B983849X
A101U23	1820-0482		IC:CTL 1 OF 8 DECODER	07263	U6B983849X
A101U24	1820-0482		IC:CTL 1 OF 8 DECODER	07263	U6B983849X
A101W1	8159-0005	6	JUMPER WIRE	28480	8159-0005
A101W2	8159-0005		JUMPER WIRE	28480	8159-0005

Table 2-12. A101, A104, A109, A112 X-Y Driver/Switch Card, Replaceable Parts (Continued)

Reference Designation	HP Part Number	Qty	Description	Mfr Code	Mfr Part Number
A101W3	8159-0005		JUMPER WIRE	28480	8159-0005
A101W4	8159-0005		JUMPER WIRE	28480	8159-0005
A101W5	8159-0005		JUMPER WIRE	28480	8159-0005
A101W6	8159-0005		JUMPER WIRE	28480	8159-0005
A104			SAME AS A101, USE PREFIX A104		
A109			SAME AS A101, USE PREFIX A109		
A112			SAME AS A101, USE PREFIX A112		

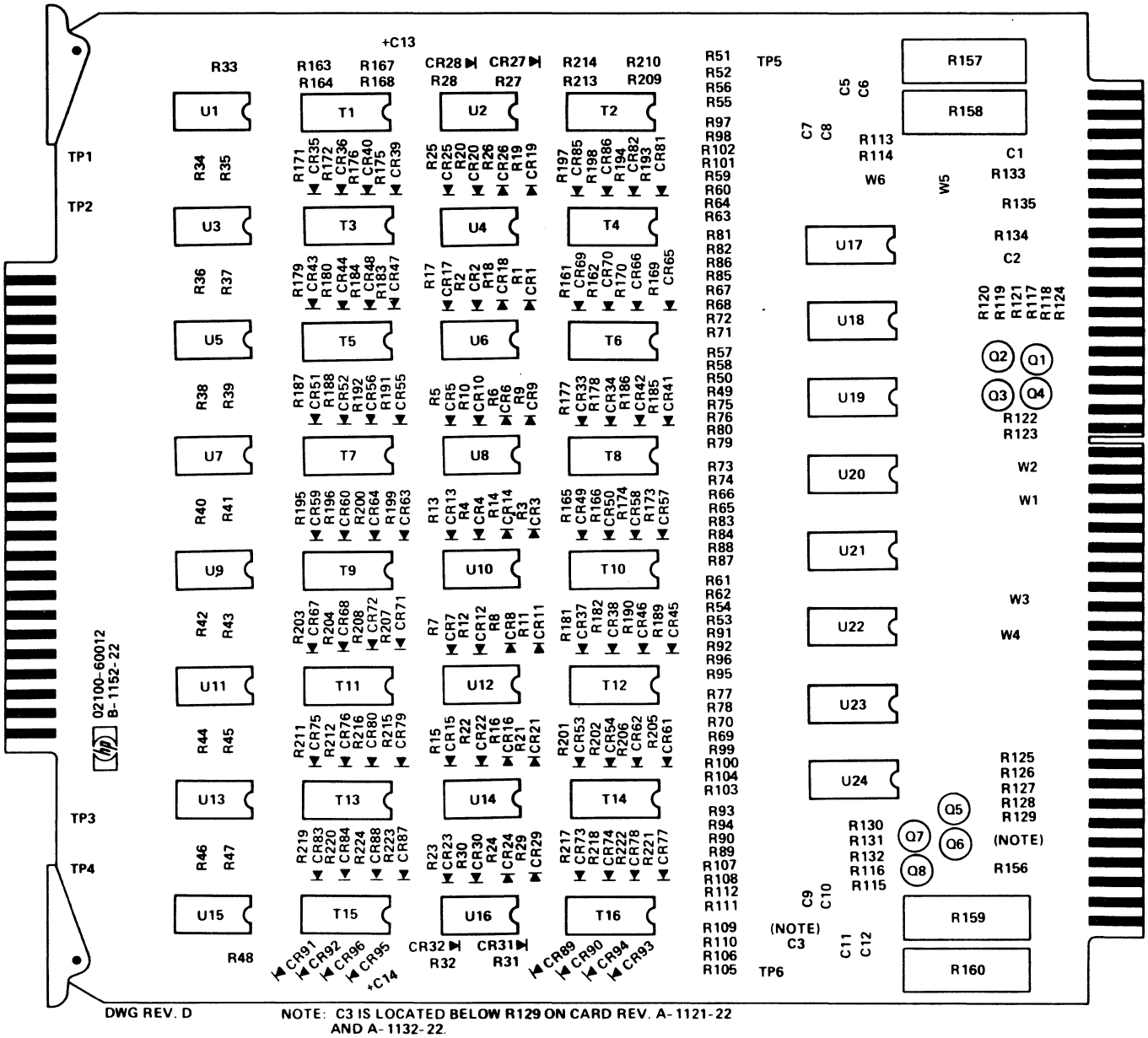

Figure 2-12. A101, A104, A109, A112 X-Y Driver/Switch Card, Parts Location Diagram

Table 2-13. A102, A103 Core Stack/Sense Amplifier Card (4K), Replaceable Parts

Reference Designation	HP Part Number	Qty	Description	Mfr Code	Mfr Part Number
A102	02100-60040	2	CORE STACK/SENSE AMPL CARD-4K	28480	02100-60040
A102A1	5087-0002	1	4K CORE STACK ASSY	28480	5087-0002
A102C1	0160-2055	9	C:FXD CER 0.01 UF +80-20% 100VDCW	56289	C023F101F103ZS22-CDH
A102C2	0160-2055		C:FXD CER 0.01 UF +80-20% 100VDCW	56289	C023F101F103ZS22-CDH
A102C3	0160-2055		C:FXD CER 0.01 UF +80-20% 100VDCW	56289	C023F101F103ZS22-CDH
A102C4	0160-2055		C:FXD CER 0.01 UF +80-20% 100VDCW	56289	C023F101F103ZS22-CDH
A102C5	0160-0127	9	C:FXD CER 1.0 UF 20% 25VDCW	56289	5C13CS-CML
A102C6	0160-0127		C:FXD CER 1.0 UF 20% 25VDCW	56289	5C13CS-CML
A102C7	0160-0127		C:FXD CER 1.0 UF 20% 25VDCW	56289	5C13CS-CML
A102C8	0160-0127		C:FXD CER 1.0 UF 20% 25VDCW	56289	5C13CS-CML
A102C9	0160-0127		C:FXD CER 1.0 UF 20% 25VDCW	56289	5C13CS-CML
A102C10	0160-0127		C:FXD CER 1.0 UF 20% 25VDCW	56289	5C13CS-CML
A102C11	0160-2055		C:FXD CER 0.01 UF +80-20% 100VDCW	56289	C023F101F103ZS22-CDH
A102C12	0160-2055		C:FXD CER 0.01 UF +80-20% 100VDCW	56289	C023F101F103ZS22-CDH
A102C13	0160-2055		C:FXD CER 0.01 UF +80-20% 100VDCW	56289	C023F101F103ZS22-CDH
A102C14	0160-2055		C:FXD CER 0.01 UF +80-20% 100VDCW	56289	C023F101F103ZS22-CDH
A102C15	0160-2055		C:FXD CER 0.01 UF +80-20% 100VDCW	56289	C023F101F103ZS22-CDH
A102C16	0160-0127		C:FXD CER 1.0 UF 20% 25VDCW	56289	5C13CS-CML
A102C17	0160-0127		C:FXD CER 1.0 UF 20% 25VDCW	56289	5C13CS-CML
A102C18	0160-2307	1	C:FXD MICA 47 PF 5%	28480	0160-2307
A102C19 (NOTE1)	0160-0127		C:FXD CER 1.0 UF 20% 25VDCW	56289	5C13CS-CML
A102C20 (NOTE1)	0180-0229	3	C:FXD ELECT 33 UF 10% 10VDCW	28480	0180-0229
A102C21 (NOTE1)	0180-0229		C:FXD ELECT 33 UF 10% 10VDCW	28480	0180-0229
A102C22 (NOTE1)	0180-0229		C:FXD ELECT 33 UF 10% 10VDCW	28480	0180-0229
A102CR1	1910-0016	1	DIODE:GERMANIUM 100MA/0.85V 60PIV	93332	D2361
A102Q1	1854-0215	18	TSTR:SI NPN	80131	2N3904
A102Q2	1853-0086	35	TSTR:SI PNP	80131	2N5087
A102Q3	1853-0086		TSTR:SI PNP	80131	2N5087
A102Q4	1854-0215		TSTR:SI NPN	80131	2N3904
A102Q5	1853-0086		TSTR:SI PNP	80131	2N5087
A102Q6	1853-0086		TSTR:SI PNP	80131	2N5087
A102Q7	1854-0215		TSTR:SI NPN	80131	2N3904
A102Q8	1853-0086		TSTR:SI PNP	80131	2N5087
A102Q9	1853-0086		TSTR:SI PNP	80131	2N5087
A102Q10	1854-0215		TSTR:SI NPN	80131	2N3904
A102Q11	1853-0086		TSTR:SI PNP	80131	2N5087
A102Q12	1853-0086		TSTR:SI PNP	80131	2N5087
A102Q13	1854-0215		TSTR:SI NPN	80131	2N3904
A102Q14	1853-0086		TSTR:SI PNP	80131	2N5087
A102Q15	1853-0086		TSTR:SI PNP	80131	2N5087
A102Q16	1854-0215		TSTR:SI NPN	80131	2N3904
A102Q17	1853-0086		TSTR:SI PNP	80131	2N5087
A102Q18	1853-0086		TSTR:SI PNP	80131	2N5087
A102Q19	1854-0215		TSTR:SI NPN	80131	2N3904
A102Q20	1853-0086		TSTR:SI PNP	80131	2N5087
A102Q21	1853-0086		TSTR:SI PNP	80131	2N5087
A102Q22	1854-0215		TSTR:SI NPN	80131	2N3904
A102Q23	1853-0086		TSTR:SI PNP	80131	2N5087
A102Q24	1853-0086		TSTR:SI PNP	80131	2N5087
A102Q25	1854-0215		TSTR:SI NPN	80131	2N3904
A102Q26	1853-0086		TSTR:SI PNP	80131	2N5087
A102Q27	1853-0086		TSTR:SI PNP	80131	2N5087
A102Q28	1853-0086		TSTR:SI PNP	80131	2N5087
A102Q29	1854-0215		TSTR:SI NPN	80131	2N3904
A102Q30	1853-0086		TSTR:SI PNP	80131	2N5087
A102Q31	1853-0086		TSTR:SI PNP	80131	2N5087
A102Q32	1854-0215		TSTR:SI NPN	80131	2N3904
A102Q33	1853-0086		TSTR:SI PNP	80131	2N5087
A102Q34	1853-0086		TSTR:SI PNP	80131	2N5087
A102Q35	1854-0215		TSTR:SI NPN	80131	2N3904
A102Q36	1853-0086		TSTR:SI PNP	80131	2N5087
A102Q37	1853-0086		TSTR:SI PNP	80131	2N5087
A102Q38	1854-0215		TSTR:SI NPN	80131	2N3904
A102Q39	1853-0086		TSTR:SI PNP	80131	2N5087
A102Q40	1853-0086		TSTR:SI PNP	80131	2N5087
A102Q41	1854-0215		TSTR:SI NPN	80131	2N3904
A102Q42	1853-0086		TSTR:SI PNP	80131	2N5087
A102Q43	1853-0086		TSTR:SI PNP	80131	2N5087
A102Q44	1854-0215		TSTR:SI NPN	80131	2N3904
A102Q45	1853-0086		TSTR:SI PNP	80131	2N5087
A102Q46	1853-0086		TSTR:SI PNP	80131	2N5087
A102Q47	1854-0215		TSTR:SI NPN	80131	2N3904
A102Q48	1853-0086		TSTR:SI PNP	80131	2N5087
A102Q49	1853-0086		TSTR:SI PNP	80131	2N5087
A102Q50	1854-0215		TSTR:SI NPN	80131	2N3904

NOTES: 1. First used on card rev. 1148.

Table 2-13. A102, A103 Core Stack/Sense Amplifier Card (4K), Replaceable Parts (Continued)

Reference Designation	HP Part Number	Qty	Description	Mfr Code	Mfr Part Number
A102Q51	1853-0086		TSTR:SI PNP	80131	2N5087
A102Q52	1853-0086		TSTR:SI PNP	80131	2N5087
A102Q53	1854-0215		TSTR:SI NPN	80131	2N3904
A102R1	0698-7310	34	R:FXD FLM 1.65K OHM 0.25% 1/8W	28480	0698-7310
A102R2	0757-0290	17	R:FXD MET FLM 6.19K OHM 1% 1/8W	28480	0757-0290
A102R3	0698-3447	17	R:FXD MET FLM 422 OHM 1% 1/8W	28480	0698-3447
A102R4	0698-3447		R:FXD MET FLM 422 OHM 1% 1/8W	28480	0698-3447
A102R5	0757-0290		R:FXD MET FLM 6.19K OHM 1% 1/8W	28480	0757-0290
A102R6	0698-7310		R:FXD FLM 1.65K OHM 0.25% 1/8W	28480	0698-7310
A102R7	0698-7310		R:FXD FLM 1.65K OHM 0.25% 1/8W	28480	0698-7310
A102R8	0757-0290		R:FXD MET FLM 6.19K OHM 1% 1/8W	28480	0757-0290
A102R9	0698-3447		R:FXD MET FLM 422 OHM 1% 1/8W	28480	0698-3447
A102R10	0698-3447		R:FXD MET FLM 422 OHM 1% 1/8W	28480	0698-3447
A102R11	0757-0290		R:FXD MET FLM 6.19K OHM 1% 1/8W	28480	0757-0290
A102R12	0698-7310		R:FXD FLM 1.65K OHM 0.25% 1/8W	28480	0698-7310
A102R13	0698-7310		R:FXD FLM 1.65K OHM 0.25% 1/8W	28480	0698-7310
A102R14	0757-0290		R:FXD MET FLM 6.19K OHM 1% 1/8W	28480	0757-0290
A102R15	0698-3447		R:FXD MET FLM 422 OHM 1% 1/8W	28480	0698-3447
A102R16	0698-3447		R:FXD MET FLM 422 OHM 1% 1/8W	28480	0698-3447
A102R17	0757-0290		R:FXD MET FLM 6.19K OHM 1% 1/8W	28480	0757-0290
A102R18	0698-7310		R:FXD FLM 1.65K OHM 0.25% 1/8W	28480	0698-7310
A102R19	0698-7310		R:FXD FLM 1.65K OHM 0.25% 1/8W	28480	0698-7310
A102R20	0757-0290		R:FXD MET FLM 6.19K OHM 1% 1/8W	28480	0757-0290
A102R21	0698-3447		R:FXD MET FLM 422 OHM 1% 1/8W	28480	0698-3447
A102R22	0698-3447		R:FXD MET FLM 422 OHM 1% 1/8W	28480	0698-3447
A102R23	0757-0290		R:FXD MET FLM 6.19K OHM 1% 1/8W	28480	0757-0290
A102R24	0698-7310		R:FXD FLM 1.65K OHM 0.25% 1/8W	28480	0698-7310
A102R25	0698-7310		R:FXD FLM 1.65K OHM 0.25% 1/8W	28480	0698-7310
A102R26	0698-7310		R:FXD FLM 1.65K OHM 0.25% 1/8W	28480	0698-7310
A102R27	0698-7310		R:FXD FLM 1.65K OHM 0.25% 1/8W	28480	0698-7310
A102R28	0698-7310		R:FXD FLM 1.65K OHM 0.25% 1/8W	28480	0698-7310
A102R29	0698-7310		R:FXD FLM 1.65K OHM 0.25% 1/8W	28480	0698-7310
A102R30	0698-7310		R:FXD FLM 1.65K OHM 0.25% 1/8W	28480	0698-7310
A102R31	0698-7310		R:FXD FLM 1.65K OHM 0.25% 1/8W	28480	0698-7310
A102R32	0698-7310		R:FXD FLM 1.65K OHM 0.25% 1/8W	28480	0698-7310
A102R33	0698-3441	1	R:FXD MET FLM 215 OHM 1% 1/8W	28480	0698-3441
A102R34	0757-0280	1	R:FXD MET FLM 1K OHM 1% 1/8W	28480	0757-0280
A102R35	0757-0417	1	R:FXD MET FLM 562 OHM 1% 1/8W	28480	0757-0417
A102R36	0757-0420	1	R:FXD MET FLM 750 OHM 1% 1/8W	28480	0757-0420
A102R37	0698-0082	1	R:FXD MET FLM 464 OHM 1% 1/8W	28480	0698-0082
A102R38	1810-0045	3	RESISTOR PACK:7 RES. 200 OHM 5% 0.15W	28480	1810-0045
A102R39	1810-0045		RESISTOR PACK:7 RES. 200 OHM 5% 0.15W	28480	1810-0045
A102R40	2100-2061	1	R:VAR FLM 200 OHM 10% LIN 1/2W	28480	2100-2061
A102R41	1810-0045		RESISTOR PACK:7 RES. 200 OHM 5% 0.15W	28480	1810-0045
A102R42	0698-7310		R:FXD FLM 1.65K OHM 0.25% 1/8W	28480	0698-7310
A102R43	0698-7310		R:FXD FLM 1.65K OHM 0.25% 1/8W	28480	0698-7310
A102R44	0698-7310		R:FXD FLM 1.65K OHM 0.25% 1/8W	28480	0698-7310
A102R45	0698-7310		R:FXD FLM 1.65K OHM 0.25% 1/8W	28480	0698-7310
A102R46	0698-7310		R:FXD FLM 1.65K OHM 0.25% 1/8W	28480	0698-7310
A102R47	0698-7310		R:FXD FLM 1.65K OHM 0.25% 1/8W	28480	0698-7310
A102R48	0698-7310		R:FXD FLM 1.65K OHM 0.25% 1/8W	28480	0698-7310
A102R49	0698-7310		R:FXD FLM 1.65K OHM 0.25% 1/8W	28480	0698-7310
A102R50	0698-7310		R:FXD FLM 1.65K OHM 0.25% 1/8W	28480	0698-7310
A102R51	0698-7310		R:FXD FLM 1.65K OHM 0.25% 1/8W	28480	0698-7310
A102R52	0698-3447		R:FXD MET FLM 422 OHM 1% 1/8W	28480	0698-3447
A102R53	0757-0290		R:FXD MET FLM 6.19K OHM 1% 1/8W	28480	0757-0290
A102R54	0698-7310		R:FXD FLM 1.65K OHM 0.25% 1/8W	28480	0698-7310
A102R55	0757-0290		R:FXD MET FLM 6.19K OHM 1% 1/8W	28480	0757-0290
A102R56	0698-3447		R:FXD MET FLM 422 OHM 1% 1/8W	28480	0698-3447
A102R57	0698-3447		R:FXD MET FLM 422 OHM 1% 1/8W	28480	0698-3447
A102R58	0757-0290		R:FXD MET FLM 6.19K OHM 1% 1/8W	28480	0757-0290
A102R59	0698-7310		R:FXD FLM 1.65K OHM 0.25% 1/8W	28480	0698-7310
A102R60	0698-7310		R:FXD FLM 1.65K OHM 0.25% 1/8W	28480	0698-7310
A102R61	0757-0290		R:FXD MET FLM 6.19K OHM 1% 1/8W	28480	0757-0290
A102R62	0698-3447		R:FXD MET FLM 422 OHM 1% 1/8W	28480	0698-3447
A102R63	0698-3447		R:FXD MET FLM 422 OHM 1% 1/8W	28480	0698-3447
A102R64	0757-0290		R:FXD MET FLM 6.19K OHM 1% 1/8W	28480	0757-0290
A102R65	0698-7310		R:FXD FLM 1.65K OHM 0.25% 1/8W	28480	0698-7310
A102R66	0698-7310		R:FXD FLM 1.65K OHM 0.25% 1/8W	28480	0698-7310
A102R67	0757-0290		R:FXD MET FLM 6.19K OHM 1% 1/8W	28480	0757-0290
A102R68	0698-3447		R:FXD MET FLM 422 OHM 1% 1/8W	28480	0698-3447
A102R69	0698-3447		R:FXD MET FLM 422 OHM 1% 1/8W	28480	0698-3447
A102R70	0757-0290		R:FXD MET FLM 6.19K OHM 1% 1/8W	28480	0757-0290
A102R71	0698-7310		R:FXD FLM 1.65K OHM 0.25% 1/8W	28480	0698-7310
A102R72	0698-7310		R:FXD FLM 1.65K OHM 0.25% 1/8W	28480	0698-7310

Table 2-13. A102, A103 Core Stack/Sense Amplifier Card (4K), Replaceable Parts (Continued)

Reference Designation	HP Part Number	Qty	Description	Mfr Code	Mfr Part Number
A102R73	0757-0290		R:FXD MET FLM 6.19K OHM 1% 1/8W	28480	0757-0290
A102R74	0698-3447		R:FXD MET FLM 422 OHM 1% 1/8W	28480	0698-3447
A102R75	0698-3447		R:FXD MET FLM 422 OHM 1% 1/8W	28480	0698-3447
A102R76	0757-0290		R:FXD MET FLM 6.19K OHM 1% 1/8W	28480	0757-0290
A102R77	0698-7310		R:FXD FLM 1.65K OHM 0.25% 1/8W	28480	0698-7310
A102R78	0757-0401	1	R:FXD MET FLM 100 OHM 1% 1/8W	28480	0757-0401
A102U1	1858-0001	9	TSTR ARRAY:DUAL DIFF AMPL W/CONST CUR	02735	80381
A102U2	1858-0001		TSTR ARRAY:DUAL DIFF AMPL W/CONST CUR	02735	80381
A102U3	1858-0001		TSTR ARRAY:DUAL DIFF AMPL W/CONST CUR	02735	80381
A102U4	1858-0001		TSTR ARRAY:DUAL DIFF AMPL W/CONST CUR	02735	80381
A102U5	0960-0111	9	BALUN MODULE	28480	0960-0111
A102U6	0960-0111		BALUN MODULE	28480	0960-0111
A102U7	0960-0111		BALUN MODULE	28480	0960-0111
A102U8	0960-0111		BALUN MODULE	28480	0960-0111
A102U9	1820-0370	1	IC:TTL HS QUAD 2-INPT NAND GATE	01295	SN74H00N
A102U10	0960-0111		BALUN MODULE	28480	0960-0111
A102U11	0960-0111		BALUN MODULE	28480	0960-0111
A102U12	0960-0111		BALUN MODULE	28480	0960-0111
A102U13	0960-0111		BALUN MODULE	28480	0960-0111
A102U14	0960-0111		BALUN MODULE	28480	0960-0111
A102U15	1858-0001		TSTR ARRAY:DUAL DIFF AMPL W/CONST CUR	02735	80381
A102U16	1858-0001		TSTR ARRAY:DUAL DIFF AMPL W/CONST CUR	02735	80381
A102U17	1858-0001		TSTR ARRAY:DUAL DIFF AMPL W/CONST CUR	02735	80381
A102U18	1858-0001		TSTR ARRAY:DUAL DIFF AMPL W/CONST CUR	02735	80381
A102U19	1858-0001		TSTR ARRAY:DUAL DIFF AMPL W/CONST CUR	02735	80381
A102U36 THRU A102U51	5087-1013	16	DIODE MODULE	28480	5087-1013
A103			SAME AS A102, USE PREFIX A103		

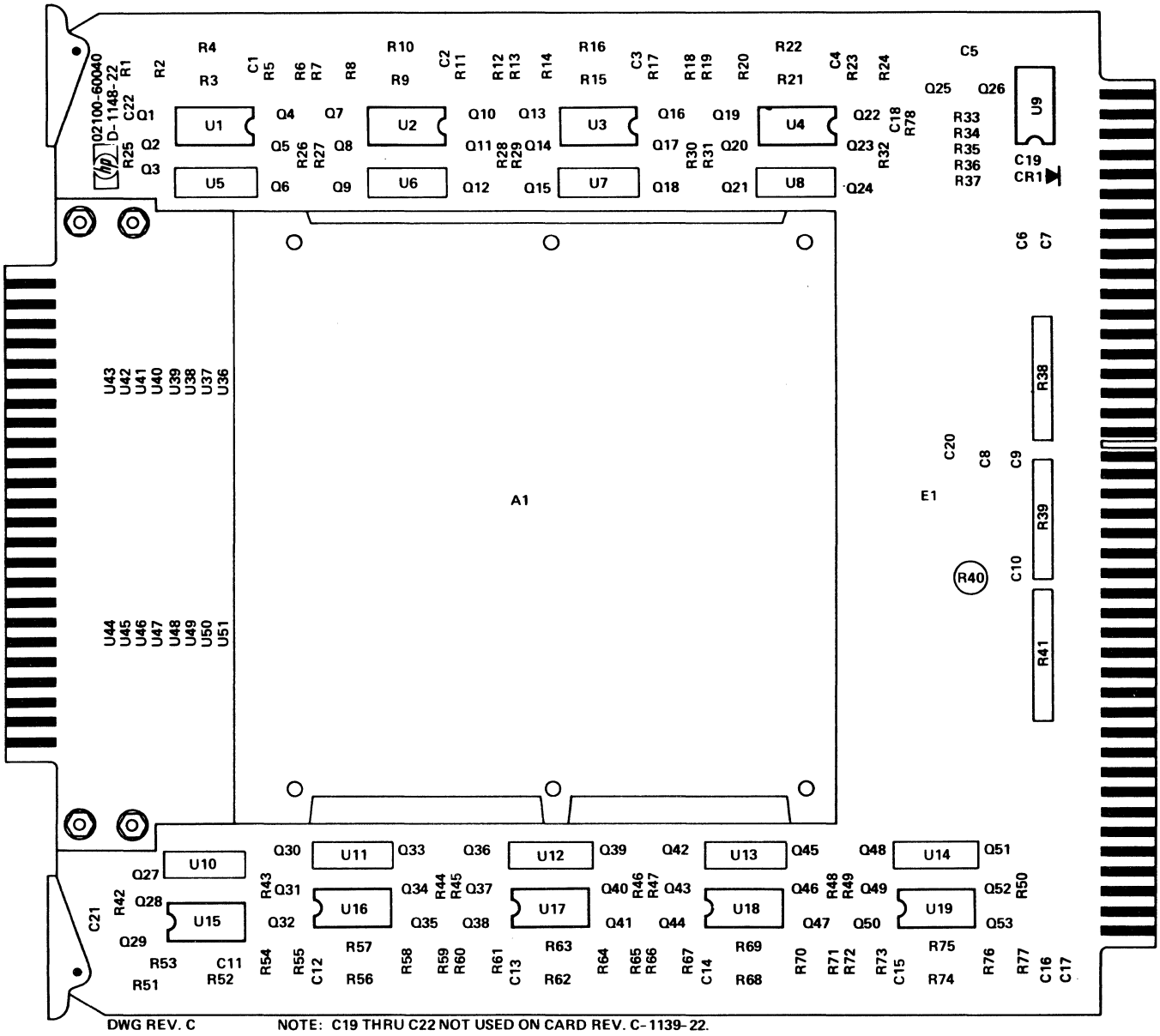

Figure 2-13. A102, A103 Core Stack/Sense Amplifier Card (4K), Parts Location Diagram

Table 2-14. A102, A103, A110, A111 Core Stack/Sense Amplifier Card (8K), Replaceable Parts

Reference Designation	HP Part Number	Qty	Description	Mfr Code	Mfr Part Number
A102 OR	5060-8331	4	CORE STACK/SENSE AMPL CARD-8K	28480	5060-8331
A102	5060-8324	4	CORE STACK/SENSE AMPL CARD-8K	28480	5060-8324
A102A1	5087-0001	1	8K CORE STACK ASSY	28480	5087-0001
A102C1	0160-0127	11	C:FXD CER 1.0 UF 20% 25VDCW	56289	5C13CS-CML
A102C2	0160-0127		C:FXD CER 1.0 UF 20% 25VDCW	56289	5C13CS-CML
A102C3	0160-0127		C:FXD CER 1.0 UF 20% 25VDCW	56289	5C13CS-CML
A102C4	0160-0127		C:FXD CER 1.0 UF 20% 25VDCW	56289	5C13CS-CML
A102C5	0160-0127		C:FXD CER 1.0 UF 20% 25VDCW	56289	5C13CS-CML
A102C6	0160-0127		C:FXD CER 1.0 UF 20% 25VDCW	56289	5C13CS-CML
A102C7	0160-0127		C:FXD CER 1.0 UF 20% 25VDCW	56289	5C13CS-CML
A102C8	0160-0127		C:FXD CER 1.0 UF 20% 25VDCW	56289	5C13CS-CML
A102C9	0160-0127		C:FXD CER 1.0 UF 20% 25VDCW	56289	5C13CS-CML
A102C10(NOTE 1)	0160-0127		C:FXD CER 1.0 UF 20% 25VDCW	56289	5C13CS-CML
A102C11(NOTE 1)	0160-0127		C:FXD CER 1.0 UF 20% 25VDCW	56289	5C13CS-CML
A102C12(NOTE 1)	0180-0229	3	C:FXD ELECT 33 UF 10% 10VDCW	28480	0180-0229
A102C13(NOTE 1)	0180-0229		C:FXD ELECT 33 UF 10% 10VDCW	28480	0180-0229
A102C14(NOTE 1)	0180-0229		C:FXD ELECT 33 UF 10% 10VDCW	28480	0180-0229
A102C15(NOTE 3)	0160-2306	2	C:FXD MICA 27 PF 5%	28480	0160-2306
A102C16(NOTE 3)	0160-2306		C:FXD MICA 27 PF 5%	28480	0160-2306
A102CR1	1910-0016	2	DIODE:GE 100MA/0.85V 60PIV	93332	D2361
A102CR2	1910-0016		DIODE:GE 100MA/0.85V 60PIV	93332	D2361
A102E1	0360-0294	2	TERMINAL:SOLDER POINT	28480	0360-0294
A102E2	0360-0294		TERMINAL:SOLDER POINT	28480	0360-0294
A102E3 THRU A102E6 (NOTE 2)	9170-0847	4	CORE: FERRITE	02114	56-590-65-3P
A102Q1	1853-0086	36	TSTR:SI PNP	80131	2N5087
A102Q2	1853-0086		TSTR:SI PNP	80131	2N5087
A102Q3	1853-0086		TSTR:SI PNP	80131	2N5087
A102Q4	1853-0086		TSTR:SI PNP	80131	2N5087
A102Q5	1853-0086		TSTR:SI PNP	80131	2N5087
A102Q6	1853-0086		TSTR:SI PNP	80131	2N5087
A102Q7	1853-0086		TSTR:SI PNP	80131	2N5087
A102Q8	1853-0086		TSTR:SI PNP	80131	2N5087
A102Q9	1853-0086		TSTR:SI PNP	80131	2N5087
A102Q10	1853-0086		TSTR:SI PNP	80131	2N5087
A102Q11	1853-0086		TSTR:SI PNP	80131	2N5087
A102Q12	1853-0086		TSTR:SI PNP	80131	2N5087
A102Q13	1853-0086		TSTR:SI PNP	80131	2N5087
A102Q14	1853-0086		TSTR:SI PNP	80131	2N5087
A102Q15	1853-0086		TSTR:SI PNP	80131	2N5087
A102Q16	1853-0086		TSTR:SI PNP	80131	2N5087
A102Q17	1853-0086		TSTR:SI PNP	80131	2N5087
A102Q18	1853-0086		TSTR:SI PNP	80131	2N5087
A102Q19	1854-0215	17	TSTR:SI NPN	80131	2N3904
A102Q20	1854-0215		TSTR:SI NPN	80131	2N3904
A102Q21	1854-0215		TSTR:SI NPN	80131	2N3904
A102Q22	1854-0215		TSTR:SI NPN	80131	2N3904
A102Q23	1854-0215		TSTR:SI NPN	80131	2N3904
A102Q24	1854-0215		TSTR:SI NPN	80131	2N3904
A102Q25	1854-0215		TSTR:SI NPN	80131	2N3904
A102Q26	1854-0215		TSTR:SI NPN	80131	2N3904
A102Q27	1854-0215		TSTR:SI NPN	80131	2N3904
A102Q28	1854-0215		TSTR:SI NPN	80131	2N3904
A102Q29	1854-0215		TSTR:SI NPN	80131	2N3904
A102Q30	1854-0215		TSTR:SI NPN	80131	2N3904
A102Q31	1854-0215		TSTR:SI NPN	80131	2N3904
A102Q32	1854-0215		TSTR:SI NPN	80131	2N3904
A102Q33	1854-0215		TSTR:SI NPN	80131	2N3904
A102Q34	1854-0215		TSTR:SI NPN	80131	2N3904
A102Q35	1854-0215		TSTR:SI NPN	80131	2N3904
A102Q36	1853-0086		TSTR:SI PNP	80131	2N5087
A102Q37	1853-0086		TSTR:SI PNP	80131	2N5087
A102Q38	1853-0086		TSTR:SI PNP	80131	2N5087
A102Q39	1853-0086		TSTR:SI PNP	80131	2N5087
A102Q40	1853-0086		TSTR:SI PNP	80131	2N5087
A102Q41	1853-0086		TSTR:SI PNP	80131	2N5087
A102Q42	1853-0086		TSTR:SI PNP	80131	2N5087
A102Q43	1853-0086		TSTR:SI PNP	80131	2N5087
A102Q44	1853-0086		TSTR:SI PNP	80131	2N5087
A102Q45	1853-0086		TSTR:SI PNP	80131	2N5087
A102Q46	1853-0086		TSTR:SI PNP	80131	2N5087
A102Q47	1853-0086		TSTR:SI PNP	80131	2N5087
A102Q48	1853-0086		TSTR:SI PNP	80131	2N5087
A102Q49	1853-0086		TSTR:SI PNP	80131	2N5087
A102Q50	1853-0086		TSTR:SI PNP	80131	2N5087
A102Q51	1853-0086		TSTR:SI PNP	80131	2N5087
A102Q52	1853-0086		TSTR:SI PNP	80131	2N5087
A102Q53	1853-0086		TSTR:SI PNP	80131	2N5087
A102R1	0698-7310	34	R:FXD FLM 1.65K OHM 0.25% 1/8W	28480	0698-7310

NOTES: 1. Used on card part no. 5060-8331 only.
2. Used on card part no. 5060-8324, rev. 1136 only.
3. First used on card rev. 1301.

Table 2-14. A102, A103, A110, A111 Core Stack/Sense Amplifier Card (8K), Replaceable Parts (Continued)

Reference Designation	HP Part Number	Qty	Description	Mfr Code	Mfr Part Number
A102R2	0698-3488	68	R:FXD MET FLM 442 OHM 1% 1/8W	28480	0698-3488
A102R3	0698-7310		R:FXD FLM 1.65K OHM 0.25% 1/8W	28480	0698-7310
A102R4	0698-3488		R:FXD MET FLM 442 OHM 1% 1/8W	28480	0698-3488
A102R5	0698-7310		R:FXD FLM 1.65K OHM 0.25% 1/8W	28480	0698-7310
A102R6	0698-7310		R:FXD FLM 1.65K OHM 0.25% 1/8W	28480	0698-7310
A102R7	0698-3488		R:FXD MET FLM 442 OHM 1% 1/8W	28480	0698-3488
A102R8	0698-7310		R:FXD FLM 1.65K OHM 0.25% 1/8W	28480	0698-7310
A102R9	0698-7310		R:FXD FLM 1.65K OHM 0.25% 1/8W	28480	0698-7310
A102R10	0698-3488		R:FXD MET FLM 442 OHM 1% 1/8W	28480	0698-3488
A102R11	0698-7310		R:FXD FLM 1.65K OHM 0.25% 1/8W	28480	0698-7310
A102R12	0698-7310		R:FXD FLM 1.65K OHM 0.25% 1/8W	28480	0698-7310
A102R13	0698-3488		R:FXD MET FLM 442 OHM 1% 1/8W	28480	0698-3488
A102R14	0698-7310		R:FXD FLM 1.65K OHM 0.25% 1/8W	28480	0698-7310
A102R15	0698-7310		R:FXD FLM 1.65K OHM 0.25% 1/8W	28480	0698-7310
A102R16	0698-3488		R:FXD MET FLM 442 OHM 1% 1/8W	28480	0698-3488
A102R17	0698-7310		R:FXD FLM 1.65K OHM 0.25% 1/8W	28480	0698-7310
A102R18	0698-7310		R:FXD FLM 1.65K OHM 0.25% 1/8W	28480	0698-7310
A102R19	0698-3488		R:FXD MET FLM 442 OHM 1% 1/8W	28480	0698-3488
A102R20	0698-7310		R:FXD FLM 1.65K OHM 0.25% 1/8W	28480	0698-7310
A102R21	0698-7310		R:FXD FLM 1.65K OHM 0.25% 1/8W	28480	0698-7310
A102R22	0698-3488		R:FXD MET FLM 442 OHM 1% 1/8W	28480	0698-3488
A102R23	0698-7310		R:FXD FLM 1.65K OHM 0.25% 1/8W	28480	0698-7310
A102R24	0698-7310		R:FXD FLM 1.65K OHM 0.25% 1/8W	28480	0698-7310
A102R25	0698-3430	2	R:FXD MET FLM 21.5 OHM 1% 1/8W	28480	0698-3430
A102R26		1	R:FXD(SELECTED FROM ONE OF THE FOLLOWING)		
	0698-4411		R:FXD FLM 140 OHM 1% 1/8W	28480	0698-4411
	0757-0402		R:FXD MET FLM 110 OHM 1% 1/8W	28480	0757-0402
	0757-0284		R:FXD MET FLM 150 OHM 1% 1/8W	28480	0757-0284
	0757-0403		R:FXD MET FLM 121 OHM 1% 1/8W	28480	0757-0403
	0757-0401		R:FXD MET FLM 100 OHM 1% 1/8W	28480	0757-0401
	0757-0404		R:FXD FLM 130 OHM 1% 1/8W	28480	0757-0404
A102R27	0757-0276	2	R:FXD MET FLM 61.9 OHM 1% 1/8W	28480	0757-0276
A102R28	0757-0401		R:FXD MET FLM 100 OHM 1% 1/8W	28480	0757-0401
A102R29	0757-0401		R:FXD MET FLM 100 OHM 1% 1/8W	28480	0757-0401
A102R30	0698-3430		R:FXD MET FLM 21.5 OHM 1% 1/8W	28480	0698-3430
A102R31	0757-0401	1	R:FXD MET FLM 100 OHM 1% 1/8W	28480	0757-0401
A102R32		1	R:FXD(SELECTED FROM ONE OF THE FOLLOWING)		
	0698-4411		R:FXD FLM 140 OHM 1% 1/8W	28480	0698-4411
	0757-0402		R:FXD MET FLM 110 OHM 1% 1/8W	28480	0757-0402
	0757-0284		R:FXD MET FLM 150 OHM 1% 1/8W	28480	0757-0284
	0757-0401		R:FXD MET FLM 100 OHM 1% 1/8W	28480	0757-0401
	0757-0403		R:FXD MET FLM 121 OHM 1% 1/8W	28480	0757-0403
	0757-0404		R:FXD FLM 130 OHM 1% 1/8W	28480	0757-0404
A102R33	0757-0401		R:FXD MET FLM 100 OHM 1% 1/8W	28480	0757-0401
A102R34	0757-0276		R:FXD MET FLM 61.9 OHM 1% 1/8W	28480	0757-0276
A102R35 THRU A102R51		17	R:FXD(SELECTED FROM ONE OF THE FOLLOWING)		
	0757-0200		R:FXD MET FLM 5.62K OHM 1% 1/8W	28480	0757-0200
	0757-0290		R:FXD MET FLM 6.19K OHM 1% 1/8W	28480	0757-0290
	0757-0438		R:FXD MET FLM 5.11K OHM 1% 1/8W	28480	0757-0438
	0757-0439		R:FXD MET FLM 6.81K OHM 1% 1/8W	28480	0757-0439
	0757-0440		R:FXD MET FLM 7.50K OHM 1% 1/8W	28480	0757-0440
	0757-0441		R:FXD MET FLM 8.25K OHM 1% 1/8W	28480	0757-0441
A102R52	0698-7310		R:FXD FLM 1.65K OHM 0.25% 1/8W	28480	0698-7310
A102R53	0698-7310		R:FXD FLM 1.65K OHM 0.25% 1/8W	28480	0698-7310
A102R54	0698-3488		R:FXD MET FLM 442 OHM 1% 1/8W	28480	0698-3488
A102R55	0698-7310		R:FXD FLM 1.65K OHM 0.25% 1/8W	28480	0698-7310
A102R56	0698-7310		R:FXD FLM 1.65K OHM 0.25% 1/8W	28480	0698-7310
A102R57	0698-3488		R:FXD MET FLM 442 OHM 1% 1/8W	28480	0698-3488
A102R58	0698-7310		R:FXD FLM 1.65K OHM 0.25% 1/8W	28480	0698-7310
A102R59	0698-7310		R:FXD FLM 1.65K OHM 0.25% 1/8W	28480	0698-7310
A102R60	0698-7310		R:FXD FLM 1.65K OHM 0.25% 1/8W	28480	0698-7310
A102R61	0698-3488		R:FXD MET FLM 442 OHM 1% 1/8W	28480	0698-3488
A102R62	0698-7310		R:FXD FLM 1.65K OHM 0.25% 1/8W	28480	0698-7310
A102R63	0698-3488		R:FXD MET FLM 442 OHM 1% 1/8W	28480	0698-3488
A102R64	0698-7310		R:FXD FLM 1.65K OHM 0.25% 1/8W	28480	0698-7310
A102R65	0698-7310		R:FXD FLM 1.65K OHM 0.25% 1/8W	28480	0698-7310
A102R66	0698-3488		R:FXD MET FLM 442 OHM 1% 1/8W	28480	0698-3488
A102R67	0698-7310		R:FXD FLM 1.65K OHM 0.25% 1/8W	28480	0698-7310
A102R68	0698-7310		R:FXD FLM 1.65K OHM 0.25% 1/8W	28480	0698-7310
A102R69	0698-3488		R:FXD MET FLM 442 OHM 1% 1/8W	28480	0698-3488
A102R70	0698-7310		R:FXD FLM 1.65K OHM 0.25% 1/8W	28480	0698-7310
A102R71	0698-7310		R:FXD FLM 1.65K OHM 0.25% 1/8W	28480	0698-7310
A102R72	0698-3488		R:FXD MET FLM 442 OHM 1% 1/8W	28480	0698-3488
A102R73	0698-7310		R:FXD FLM 1.65K OHM 0.25% 1/8W	28480	0698-7310

Table 2-14. A102, A103, A110, A111 Core Stack/Sense Amplifier Card (8K), Replaceable Parts (Continued)

Reference Designation	HP Part Number	Qty	Description	Mfr Code	Mfr Part Number
A102R74	0698-7310		R:FXD FLM 1.65K OHM 0.25% 1/8W	28480	0698-7310
A102R75	0698-3488		R:FXD MET FLM 442 OHM 1% 1/8W	28480	0698-3488
A102R76	0698-7310		R:FXD FLM 1.65K OHM 0.25% 1/8W	28480	0698-7310
A102R77	0698-7310		R:FXD FLM 1.65K OHM 0.25% 1/8W	28480	0698-7310
A102R78	0698-3488		R:FXD MET FLM 442 OHM 1% 1/8W	28480	0698-3488
A102R79	2100-2061	1	R:VAR FLM 200 OHM 10% LIN 1/2W	28480	2100-2061
A102R80	1810-0045	5	RESISTOR PACK:7 RES. 200 OHM 5% 0.15W	28480	1810-0045
A102R81	1810-0045		RESISTOR PACK:7 RES. 200 OHM 5% 0.15W	28480	1810-0045
A102R82	1810-0045		RESISTOR PACK:7 RES. 200 OHM 5% 0.15W	28480	1810-0045
A102R83	1810-0045		RESISTOR PACK:7 RES. 200 OHM 5% 0.15W	28480	1810-0045
A102R84	1810-0045		RESISTOR PACK:7 RES. 200 OHM 5% 0.15W	28480	1810-0045
A102R85	0698-3132	1	R:FXD FLM 261 OHM 1% 1/8W	28480	0698-3132
A102U1	1858-0001	17	TSTR ARRAY:DUAL DIFF AMPL W/CONST CUR	02735	80381
A102U2	0960-0111	17	BALUN MODULE	28480	0960-0111
A102U3	1858-0001		TSTR ARRAY:DUAL DIFF AMPL W/CONST CUR	02735	80381
A102U4	0960-0111		BALUN MODULE	28480	0960-0111
A102U5	1858-0001		TSTR ARRAY:DUAL DIFF AMPL W/CONST CUR	02735	80381
A102U6	0960-0111		BALUN MODULE	28480	0960-0111
A102U7	1858-0001		TSTR ARRAY:DUAL DIFF AMPL W/CONST CUR	02735	80381
A102U8	0960-0111		BALUN MODULE	28480	0960-0111
A102U9	1858-0001		TSTR ARRAY:DUAL DIFF AMPL W/CONST CUR	02735	80381
A102U10	0960-0111		BALUN MODULE	28480	0960-0111
A102U11	1858-0001		TSTR ARRAY:DUAL DIFF AMPL W/CONST CUR	02735	80381
A102U12	0960-0111		BALUN MODULE	28480	0960-0111
A102U13	1858-0001		TSTR ARRAY:DUAL DIFF AMPL W/CONST CUR	02735	80381
A102U14	0960-0111		BALUN MODULE	28480	0960-0111
A102U15	1858-0001		TSTR ARRAY:DUAL DIFF AMPL W/CONST CUR	02735	80381
A102U16	0960-0111		BALUN MODULE	28480	0960-0111
A102U17	1820-0956	1	IC:CTL DUAL 2-INPT AND BUFFER	07263	U6A995679X
A102U18	0960-0111		BALUN MODULE	28480	0960-0111
A102U19	1858-0001		TSTR ARRAY:DUAL DIFF AMPL W/CONST CUR	02735	80381
A102U20	0960-0111		BALUN MODULE	28480	0960-0111
A102U21	1858-0001		TSTR ARRAY:DUAL DIFF AMPL W/CONST CUR	02735	80381
A102U22	0960-0111		BALUN MODULE	28480	0960-0111
A102U23	1858-0001		TSTR ARRAY:DUAL DIFF AMPL W/CONST CUR	02735	80381
A102U24	0960-0111		BALUN MODULE	28480	0960-0111
A102U25	1858-0001		TSTR ARRAY:DUAL DIFF AMPL W/CONST CUR	02735	80381
A102U26	0960-0111		BALUN MODULE	28480	0960-0111
A102U27	1858-0001		TSTR ARRAY:DUAL DIFF AMPL W/CONST CUR	02735	80381
A102U28	0960-0111		BALUN MODULE	28480	0960-0111
A102U29	1858-0001		TSTR ARRAY:DUAL DIFF AMPL W/CONST CUR	02735	80381
A102U30	0960-0111		BALUN MODULE	28480	0960-0111
A102U31	1858-0001		TSTR ARRAY:DUAL DIFF AMPL W/CONST CUR	02735	80381
A102U32	0960-0111		BALUN MODULE	28480	0960-0111
A102U33	1858-0001		TSTR ARRAY:DUAL DIFF AMPL W/CONST CUR	02735	80381
A102U34	0960-0111		BALUN MODULE	28480	0960-0111
A102U35	1858-0001		TSTR ARRAY:DUAL DIFF AMPL W/CONST CUR	02735	80381
A102U36 THRU A102U51	5087-1013	16	DIODE MODULE	28480	5087-1013
A102W1	8159-0005	1	JUMPER WIRE	28480	8159-0005
A103			SAME AS A102, USE PREFIX A103		
A110			SAME AS A102, USE PREFIX A110		
A111			SAME AS A102, USE PREFIX A111		

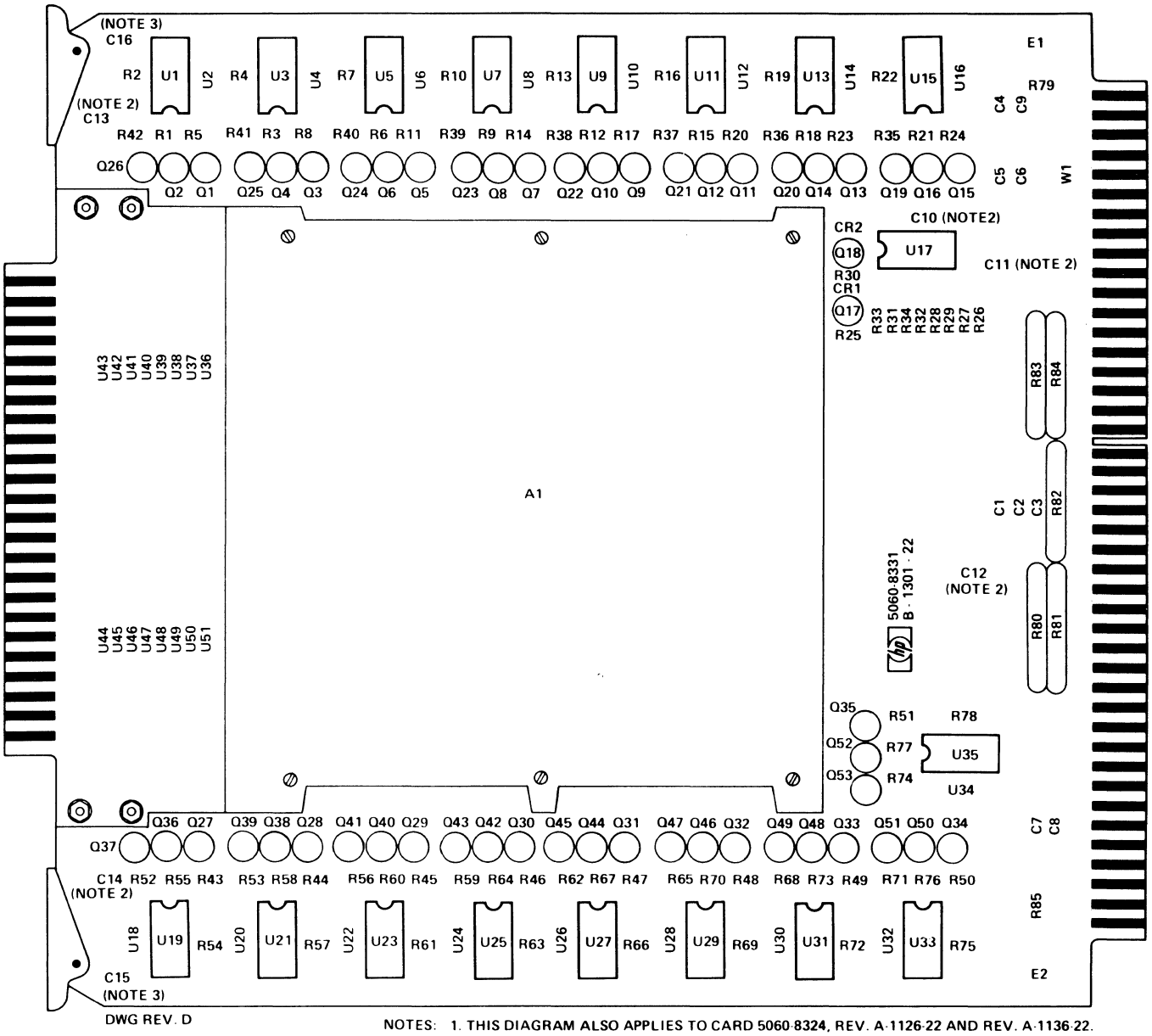

NOTES: 1. THIS DIAGRAM ALSO APPLIES TO CARD 5060-8324, REV. A-1126-22 AND REV. A-1136-22.
2. CAPACITORS C10, C11, C12, C13, AND C14 NOT USED ON CARD 5060-8324.
3. C15 AND C16 FIRST USED ON CARD 5060-8331, REV. A-1301-22.

Figure 2-14. A102, A103, A110, A111 Core Stack/Sense Amplifier Card (8K), Parts Location Diagram

Table 2-15. A105 Inhibit Driver Card (8K), Replaceable Parts

Reference Designation	HP Part Number	Qty	Description	Mfr Code	Mfr Part Number
A105	02100-60008	1	INHIBIT DRIVER CARD-8K	28480	02100-60008
A105C1	0160-0127	10	C:FXD CER 1.0 UF 20% 25VDCW	56289	5C13CS-CML
A105C2	0160-0127		C:FXD CER 1.0 UF 20% 25VDCW	56289	5C13CS-CML
A105C3	0160-0127		C:FXD CER 1.0 UF 20% 25VDCW	56289	5C13CS-CML
A105C4	0160-0127		C:FXD CER 1.0 UF 20% 25VDCW	56289	5C13CS-CML
A105C7	0160-0128	3	C:FXD CER 2.2 UF 20% 25VDCW	56289	5C152C2S-CML
A105C8	0160-0127		C:FXD CER 1.0 UF 20% 25VDCW	56289	5C13CS-CML
A105C9	0160-0127		C:FXD CER 1.0 UF 20% 25VDCW	56289	5C13CS-CML
A105C10	0160-0127		C:FXD CER 1.0 UF 20% 25VDCW	56289	5C13CS-CML
A105C14	0180-0116	1	C:FXD ELECT 6.8 UF 10% 35VDCW	56289	150D685X9035B2-DYS
A105C15	0180-0374	1	C:FXD TANT. 10 UF 10% 20VDCW	56289	150D106X9020B2-DYS
A105C16	0160-0128		C:FXD CER 2.2 UF 20% 25VDCW	56289	5C152C2S-CML
A105C17	0160-0127		C:FXD CER 1.0 UF 20% 25VDCW	56289	5C13CS-CML
A105C18	0160-0127		C:FXD CER 1.0 UF 20% 25VDCW	56289	5C13CS-CML
A105C19	0160-0127		C:FXD CER 1.0 UF 20% 25VDCW	56289	5C13CS-CML
A105C23	0160-0128		C:FXD CER 2.2 UF 20% 25VDCW	56289	5C152C2S-CML
A105CR1	1901-0620	34	DIODE BREAKDOWN	28480	1901-0620
A105CR2	1901-0620		DIODE BREAKDOWN	28480	1901-0620
A105CR3	1901-0620		DIODE BREAKDOWN	28480	1901-0620
A105CR4	1901-0620		DIODE BREAKDOWN	28480	1901-0620
A105CR5	1901-0620		DIODE BREAKDOWN	28480	1901-0620
A105CR6	1901-0620		DIODE BREAKDOWN	28480	1901-0620
A105CR7	1901-0620		DIODE BREAKDOWN	28480	1901-0620
A105CR8	1901-0620		DIODE BREAKDOWN	28480	1901-0620
A105CR9	1901-0620		DIODE BREAKDOWN	28480	1901-0620
A105CR10	1901-0620		DIODE BREAKDOWN	28480	1901-0620
A105CR21	1901-0620		DIODE BREAKDOWN	28480	1901-0620
A105CR22	1901-0620		DIODE BREAKDOWN	28480	1901-0620
A105CR23	1901-0620		DIODE BREAKDOWN	28480	1901-0620
A105CR24	1901-0620		DIODE BREAKDOWN	28480	1901-0620
A105CR25	1901-0620		DIODE BREAKDOWN	28480	1901-0620
A105CR26	1901-0620		DIODE BREAKDOWN	28480	1901-0620
A105CR27	1901-0620		DIODE BREAKDOWN	28480	1901-0620
A105CR28	1901-0620		DIODE BREAKDOWN	28480	1901-0620
A105CR29	1901-0620		DIODE BREAKDOWN	28480	1901-0620
A105CR30	1901-0620		DIODE BREAKDOWN	28480	1901-0620
A105CR31	1901-0620		DIODE BREAKDOWN	28480	1901-0620
A105CR32	1901-0620		DIODE BREAKDOWN	28480	1901-0620
A105CR45	1901-0620		DIODE BREAKDOWN	28480	1901-0620
A105CR46	1901-0620		DIODE BREAKDOWN	28480	1901-0620
A105CR47	1901-0620		DIODE BREAKDOWN	28480	1901-0620
A105CR48	1901-0620		DIODE BREAKDOWN	28480	1901-0620
A105CR49	1901-0620		DIODE BREAKDOWN	28480	1901-0620
A105CR50	1901-0620		DIODE BREAKDOWN	28480	1901-0620
A105CR51	1901-0620		DIODE BREAKDOWN	28480	1901-0620
A105CR52	1901-0620		DIODE BREAKDOWN	28480	1901-0620
A105CR53	1901-0620		DIODE BREAKDOWN	28480	1901-0620
A105CR54	1901-0620		DIODE BREAKDOWN	28480	1901-0620
A105CR55	1901-0620		DIODE BREAKDOWN	28480	1901-0620
A105CR56	1901-0620		DIODE BREAKDOWN	28480	1901-0620
A105Q1	1854-0532	34	TSTR:SI NPN	02735	2N5262
A105Q2	1854-0532		TSTR:SI NPN	02735	2N5262
A105Q3	1854-0532		TSTR:SI NPN	02735	2N5262
A105Q4	1854-0532		TSTR:SI NPN	02735	2N5262
A105Q5	1854-0532		TSTR:SI NPN	02735	2N5262
A105Q11	1854-0532		TSTR:SI NPN	02735	2N5262
A105Q12	1854-0532		TSTR:SI NPN	02735	2N5262
A105Q13	1854-0532		TSTR:SI NPN	02735	2N5262
A105Q14	1854-0532		TSTR:SI NPN	02735	2N5262
A105Q15	1854-0532		TSTR:SI NPN	02735	2N5262
A105Q21	1854-0532		TSTR:SI NPN	02735	2N5262
A105Q22	1854-0532		TSTR:SI NPN	02735	2N5262
A105Q23	1854-0532		TSTR:SI NPN	02735	2N5262
A105Q24	1854-0532		TSTR:SI NPN	02735	2N5262
A105Q25	1854-0532		TSTR:SI NPN	02735	2N5262
A105Q26	1854-0532		TSTR:SI NPN	02735	2N5262
A105Q33	1854-0532		TSTR:SI NPN	02735	2N5262
A105Q34	1854-0532		TSTR:SI NPN	02735	2N5262
A105Q35	1854-0532		TSTR:SI NPN	02735	2N5262
A105Q36	1854-0532		TSTR:SI NPN	02735	2N5262
A105Q37	1854-0532		TSTR:SI NPN	02735	2N5262
A105Q38	1854-0532		TSTR:SI NPN	02735	2N5262
A105Q45	1854-0532		TSTR:SI NPN	02735	2N5262
A105Q46	1854-0532		TSTR:SI NPN	02735	2N5262
A105Q47	1854-0532		TSTR:SI NPN	02735	2N5262

Table 2-15. A105 Inhibit Driver Card (8K), Replaceable Parts (Continued)

Reference Designation	HP Part Number	Qty	Description	Mfr Code	Mfr Part Number
A105Q48	1854-0532		TSTR:SI NPN	02735	2N5262
A105Q49	1854-0532		TSTR:SI NPN	02735	2N5262
A105Q50	1854-0532		TSTR:SI NPN	02735	2N5262
A105Q57	1854-0532		TSTR:SI NPN	02735	2N5262
A105Q58	1854-0532		TSTR:SI NPN	02735	2N5262
A105Q59	1854-0532		TSTR:SI NPN	02735	2N5262
A105Q60	1854-0532		TSTR:SI NPN	02735	2N5262
A105Q61	1854-0532		TSTR:SI NPN	02735	2N5262
A105Q62	1854-0532		TSTR:SI NPN	02735	2N5262
A105R1	0757-0394	18	R:FXD MET FLM 51.1 OHM 1% 1/8W	28480	0757-0394
A105R2	0757-0403	34	R:FXD MET FLM 121 OHM 1% 1/8W	28480	0757-0403
A105R3	0757-0403		R:FXD MET FLM 121 OHM 1% 1/8W	28480	0757-0403
A105R4	0757-0403		R:FXD MET FLM 121 OHM 1% 1/8W	28480	0757-0403
A105R5	0757-0403		R:FXD MET FLM 121 OHM 1% 1/8W	28480	0757-0403
A105R6	0757-0394		R:FXD MET FLM 51.1 OHM 1% 1/8W	28480	0757-0394
A105R7	0757-0394		R:FXD MET FLM 51.1 OHM 1% 1/8W	28480	0757-0394
A105R8	0757-0403		R:FXD MET FLM 121 OHM 1% 1/8W	28480	0757-0403
A105R9	0757-0403		R:FXD MET FLM 121 OHM 1% 1/8W	28480	0757-0403
A105R10	0757-0403		R:FXD MET FLM 121 OHM 1% 1/8W	28480	0757-0403
A105R11	0757-0403		R:FXD MET FLM 121 OHM 1% 1/8W	28480	0757-0403
A105R12	0757-0394		R:FXD MET FLM 51.1 OHM 1% 1/8W	28480	0757-0394
A105R14	0757-0403		R:FXD MET FLM 121 OHM 1% 1/8W	28480	0757-0403
A105R15	0757-0403		R:FXD MET FLM 121 OHM 1% 1/8W	28480	0757-0403
A105R19	0757-0394		R:FXD MET FLM 51.1 OHM 1% 1/8W	28480	0757-0394
A105R24	0757-0394		R:FXD MET FLM 51.1 OHM 1% 1/8W	28480	0757-0394
A105R29	0757-0394		R:FXD MET FLM 51.1 OHM 1% 1/8W	28480	0757-0394
A105R30	0757-0403		R:FXD MET FLM 121 OHM 1% 1/8W	28480	0757-0403
A105R31	0757-0403		R:FXD MET FLM 121 OHM 1% 1/8W	28480	0757-0403
A105R32	0757-0403		R:FXD MET FLM 121 OHM 1% 1/8W	28480	0757-0403
A105R33	0757-0403		R:FXD MET FLM 121 OHM 1% 1/8W	28480	0757-0403
A105R34	0757-0394		R:FXD MET FLM 51.1 OHM 1% 1/8W	28480	0757-0394
A105R35	0757-0403		R:FXD MET FLM 121 OHM 1% 1/8W	28480	0757-0403
A105R36	0757-0403		R:FXD MET FLM 121 OHM 1% 1/8W	28480	0757-0403
A105R37	0757-0403		R:FXD MET FLM 121 OHM 1% 1/8W	28480	0757-0403
A105R38	0757-0403		R:FXD MET FLM 121 OHM 1% 1/8W	28480	0757-0403
A105R39	0757-0394		R:FXD MET FLM 51.1 OHM 1% 1/8W	28480	0757-0394
A105R40	0757-0403		R:FXD MET FLM 121 OHM 1% 1/8W	28480	0757-0403
A105R41	0757-0403		R:FXD MET FLM 121 OHM 1% 1/8W	28480	0757-0403
A105R42	0757-0403		R:FXD MET FLM 121 OHM 1% 1/8W	28480	0757-0403
A105R43	0757-0403		R:FXD MET FLM 121 OHM 1% 1/8W	28480	0757-0403
A105R44	0757-0394		R:FXD MET FLM 51.1 OHM 1% 1/8W	28480	0757-0394
A105R49	0757-0394		R:FXD MET FLM 51.1 OHM 1% 1/8W	28480	0757-0394
A105R54	0757-0394		R:FXD MET FLM 51.1 OHM 1% 1/8W	28480	0757-0394
A105R59	0757-0394		R:FXD MET FLM 51.1 OHM 1% 1/8W	28480	0757-0394
A105R60	0757-0403		R:FXD MET FLM 121 OHM 1% 1/8W	28480	0757-0403
A105R61	0757-0403		R:FXD MET FLM 121 OHM 1% 1/8W	28480	0757-0403
A105R62	0757-0403		R:FXD MET FLM 121 OHM 1% 1/8W	28480	0757-0403
A105R63	0757-0403		R:FXD MET FLM 121 OHM 1% 1/8W	28480	0757-0403
A105R64	0757-0394		R:FXD MET FLM 51.1 OHM 1% 1/8W	28480	0757-0394
A105R65	0757-0403		R:FXD MET FLM 121 OHM 1% 1/8W	28480	0757-0403
A105R66	0757-0403		R:FXD MET FLM 121 OHM 1% 1/8W	28480	0757-0403
A105R67	0757-0403		R:FXD MET FLM 121 OHM 1% 1/8W	28480	0757-0403
A105R68	0757-0403		R:FXD MET FLM 121 OHM 1% 1/8W	28480	0757-0403
A105R69	0757-0394		R:FXD MET FLM 51.1 OHM 1% 1/8W	28480	0757-0394
A105R70	0757-0403		R:FXD MET FLM 121 OHM 1% 1/8W	28480	0757-0403
A105R71	0757-0403		R:FXD MET FLM 121 OHM 1% 1/8W	28480	0757-0403
A105R72	0757-0403		R:FXD MET FLM 121 OHM 1% 1/8W	28480	0757-0403
A105R73	0757-0403		R:FXD MET FLM 121 OHM 1% 1/8W	28480	0757-0403
A105R74	0757-0394		R:FXD MET FLM 51.1 OHM 1% 1/8W	28480	0757-0394
A105R79	0757-0394		R:FXD MET FLM 51.1 OHM 1% 1/8W	28480	0757-0394
A105R84	0757-0394		R:FXD MET FLM 51.1 OHM 1% 1/8W	28480	0757-0394
A105T1	9100-3180	9	TRANSFORMER	28480	9100-3180
A105T2	9100-3180		TRANSFORMER	28480	9100-3180
A105T3	9100-3180		TRANSFORMER	28480	9100-3180
A105T6	9100-3180		TRANSFORMER	28480	9100-3180
A105T7	9100-3180		TRANSFORMER	28480	9100-3180
A105T8	9100-3180		TRANSFORMER	28480	9100-3180
A105T12	9100-3180		TRANSFORMER	28480	9100-3180
A105T13	9100-3180		TRANSFORMER	28480	9100-3180
A105T14	9100-3180		TRANSFORMER	28480	9100-3180
A105U11	1820-0140	1	IC:TTL DUAL 4-INPT AND BUFFER	04713	MC3026P
A105U12	1820-0621	9	IC:TTL QUAD 2-INPT NAND BUFFER W/OPEN C	01295	SN7438N
A105U13	1820-0621		IC:TTL QUAD 2-INPT NAND BUFFER W/OPEN C	01295	SN7438N
A105U14	1820-0621		IC:TTL QUAD 2-INPT NAND BUFFER W/OPEN C	01295	SN7438N
A105U31	1820-0621		IC:TTL QUAD 2-INPT NAND BUFFER W/OPEN C	01295	SN7438N

Table 2-15. A105 Inhibit Driver Card (8K), Replaceable Parts (Continued)

Reference Designation	HP Part Number	Qty	Description	Mfr Code	Mfr Part Number
A105U32	1820-0621		IC:TTL QUAD 2-INPT NAND BUFFER W/OPEN C	01295	SN7438N
A105U33	1820-0621		IC:TTL QUAD 2-INPT NAND BUFFER W/OPEN C	01295	SN7438N
A105U41	1820-0621		IC:TTL QUAD 2-INPT NAND BUFFER W/OPEN C	01295	SN7438N
A105U42	1820-0621		IC:TTL QUAD 2-INPT NAND BUFFER W/OPEN C	01295	SN7438N
A105U43	1820-0621		IC:TTL QUAD 2-INPT NAND BUFFER W/OPEN C	01295	SN7438N

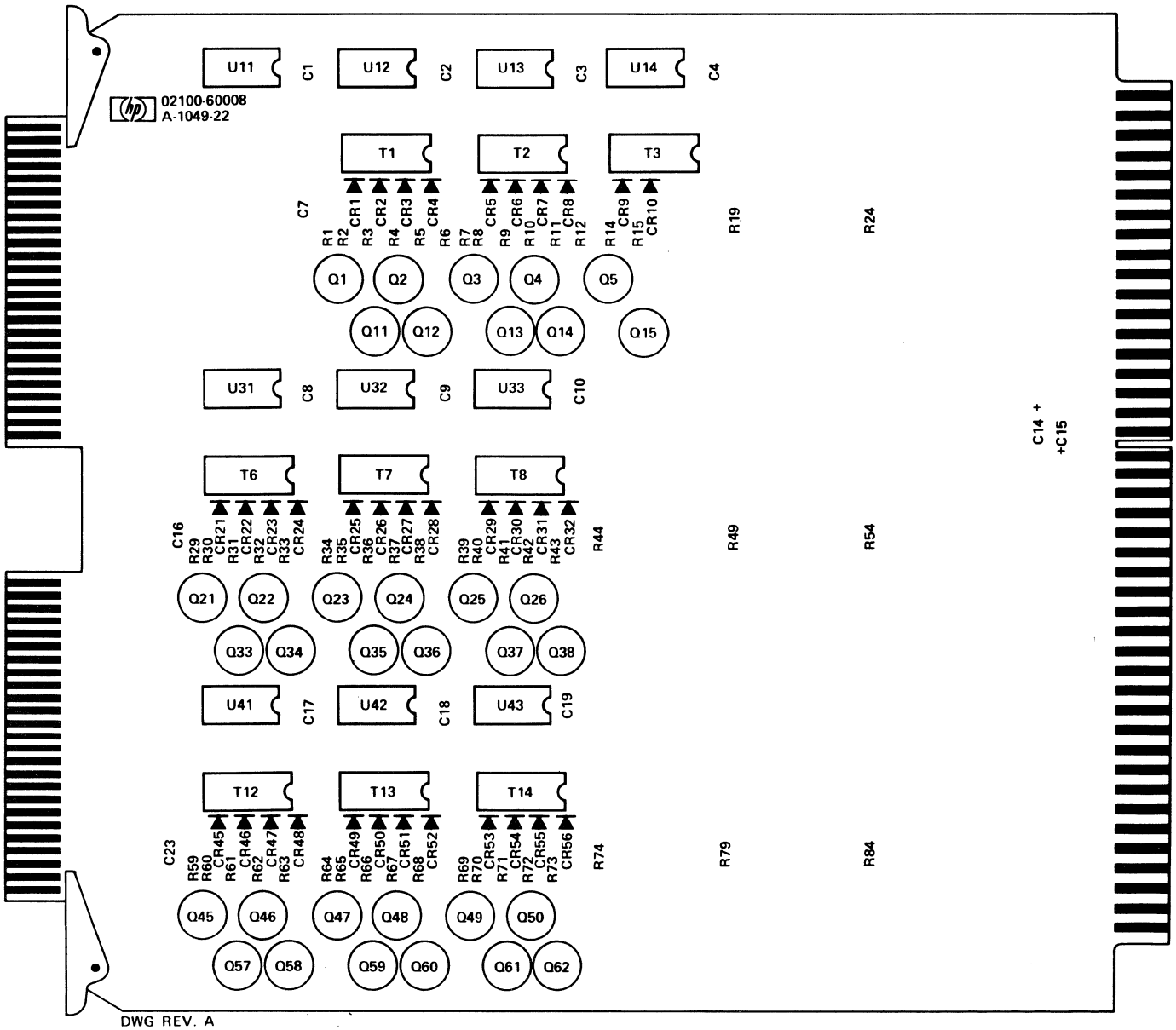

Figure 2-15. A105 Inhibit Driver Card (8K), Parts Location Diagram

Table 2-16. A105, A108 Inhibit Driver Card (16K), Replaceable Parts

Reference Designation	HP Part Number	Qty	Description	Mfr Code	Mfr Part Number
A105	02100-60009	2	INHIBIT DRIVER CARD - 16K	28480	02100-60009
A105C1	0160-0127	18	C:FXD CER 1.0 UF 20% 25VDCW	56289	5C13CS-CML
A105C2	0160-0127		C:FXD CER 1.0 UF 20% 25VDCW	56289	5C13CS-CML
A105C3	0160-0127		C:FXD CER 1.0 UF 20% 25VDCW	56289	5C13CS-CML
A105C4	0160-0127		C:FXD CER 1.0 UF 20% 25VDCW	56289	5C13CS-CML
A105C5	0160-0127		C:FXD CER 1.0 UF 20% 25VDCW	56289	5C13CS-CML
A105C6	0160-0127		C:FXD CER 1.0 UF 20% 25VDCW	56289	5C13CS-CML
A105C7	0160-0128	3	C:FXD CER 2.2 UF 20% 25VDCW	56289	5C152C2S-CML
A105C8	0160-0127		C:FXD CER 1.0 UF 20% 25VDCW	56289	5C13CS-CML
A105C9	0160-0127		C:FXD CER 1.0 UF 20% 25VDCW	56289	5C13CS-CML
A105C10	0160-0127		C:FXD CER 1.0 UF 20% 25VDCW	56289	5C13CS-CML
A105C11	0160-0127		C:FXD CER 1.0 UF 20% 25VDCW	56289	5C13CS-CML
A105C12	0160-0127		C:FXD CER 1.0 UF 20% 25VDCW	56289	5C13CS-CML
A105C13	0160-0127		C:FXD CER 1.0 UF 20% 25VDCW	56289	5C13CS-CML
A105C14	0180-0116	1	C:FXD ELECT 6.8 UF 10% 35VDCW	56289	150D685X9035B2-DYS
A105C15	0180-0374	1	C:FXD TANT. 10 UF 10% 20VDCW	56289	150D106X9020B2-DYS
A105C16	0160-0128		C:FXD CER 2.2 UF 20% 25VDCW	56289	5C152C2S-CML
A105C17	0160-0127		C:FXD CER 1.0 UF 20% 25VDCW	56289	5C13CS-CML
A105C18	0160-0127		C:FXD CER 1.0 UF 20% 25VDCW	56289	5C13CS-CML
A105C19	0160-0127		C:FXD CER 1.0 UF 20% 25VDCW	56289	5C13CS-CML
A105C20	0160-0127		C:FXD CER 1.0 UF 20% 25VDCW	56289	5C13CS-CML
A105C21	0160-0127		C:FXD CER 1.0 UF 20% 25VDCW	56289	5C13CS-CML
A105C22	0160-0127		C:FXD CER 1.0 UF 20% 25VDCW	56289	5C13CS-CML
A105C23	0160-0128		C:FXD CER 2.2 UF 20% 25VDCW	56289	5C152C2S-CML
A105CR1 THRU A105CR68	1901-0620	68	DIODE BREAKDOWN	28480	1901-0620
A105Q1 THRU A105Q68	1854-0532	68	TSTR:SI NPN	02735	2N5262
A105R1	0757-0394	20	R:FXD MET FLM 51.1 OHM 1% 1/8W	28480	0757-0394
A105R2	0757-0403	68	R:FXD MET FLM 121 OHM 1% 1/8W	28480	0757-0403
A105R3	0757-0403		R:FXD MET FLM 121 OHM 1% 1/8W	28480	0757-0403
A105R4	0757-0403		R:FXD MET FLM 121 OHM 1% 1/8W	28480	0757-0403
A105R5	0757-0403		R:FXD MET FLM 121 OHM 1% 1/8W	28480	0757-0403
A105R6	0757-0394		R:FXD MET FLM 51.1 OHM 1% 1/8W	28480	0757-0394
A105R7	0757-0394		R:FXD MET FLM 51.1 OHM 1% 1/8W	28480	0757-0394
A105R8	0757-0403		R:FXD MET FLM 121 OHM 1% 1/8W	28480	0757-0403
A105R9	0757-0403		R:FXD MET FLM 121 OHM 1% 1/8W	28480	0757-0403
A105R10	0757-0403		R:FXD MET FLM 121 OHM 1% 1/8W	28480	0757-0403
A105R11	0757-0403		R:FXD MET FLM 121 OHM 1% 1/8W	28480	0757-0403
A105R12	0757-0394		R:FXD MET FLM 51.1 OHM 1% 1/8W	28480	0757-0394
A105R13	0757-0394		R:FXD MET FLM 51.1 OHM 1% 1/8W	28480	0757-0394
A105R14	0757-0403		R:FXD MET FLM 121 OHM 1% 1/8W	28480	0757-0403
A105R15	0757-0403		R:FXD MET FLM 121 OHM 1% 1/8W	28480	0757-0403
A105R16	0757-0403		R:FXD MET FLM 121 OHM 1% 1/8W	28480	0757-0403
A105R17	0757-0403		R:FXD MET FLM 121 OHM 1% 1/8W	28480	0757-0403
A105R18	0757-0394		R:FXD MET FLM 51.1 OHM 1% 1/8W	28480	0757-0394
A105R19	0757-0394		R:FXD MET FLM 51.1 OHM 1% 1/8W	28480	0757-0394
A105R20	0757-0403		R:FXD MET FLM 121 OHM 1% 1/8W	28480	0757-0403
A105R21	0757-0403		R:FXD MET FLM 121 OHM 1% 1/8W	28480	0757-0403
A105R22	0757-0403		R:FXD MET FLM 121 OHM 1% 1/8W	28480	0757-0403
A105R23	0757-0403		R:FXD MET FLM 121 OHM 1% 1/8W	28480	0757-0403
A105R24	0757-0394		R:FXD MET FLM 51.1 OHM 1% 1/8W	28480	0757-0394
A105R25	0757-0403		R:FXD MET FLM 121 OHM 1% 1/8W	28480	0757-0403
A105R26	0757-0403		R:FXD MET FLM 121 OHM 1% 1/8W	28480	0757-0403
A105R27	0757-0403		R:FXD MET FLM 121 OHM 1% 1/8W	28480	0757-0403
A105R28	0757-0403		R:FXD MET FLM 121 OHM 1% 1/8W	28480	0757-0403
A105R29	0757-0394		R:FXD MET FLM 51.1 OHM 1% 1/8W	28480	0757-0394
A105R30	0757-0403		R:FXD MET FLM 121 OHM 1% 1/8W	28480	0757-0403
A105R31	0757-0403		R:FXD MET FLM 121 OHM 1% 1/8W	28480	0757-0403
A105R32	0757-0403		R:FXD MET FLM 121 OHM 1% 1/8W	28480	0757-0403
A105R33	0757-0403		R:FXD MET FLM 121 OHM 1% 1/8W	28480	0757-0403
A105R34	0757-0394		R:FXD MET FLM 51.1 OHM 1% 1/8W	28480	0757-0394
A105R35	0757-0403		R:FXD MET FLM 121 OHM 1% 1/8W	28480	0757-0403
A105R36	0757-0403		R:FXD MET FLM 121 OHM 1% 1/8W	28480	0757-0403
A105R37	0757-0403		R:FXD MET FLM 121 OHM 1% 1/8W	28480	0757-0403
A105R38	0757-0403		R:FXD MET FLM 121 OHM 1% 1/8W	28480	0757-0403
A105R39	0757-0394		R:FXD MET FLM 51.1 OHM 1% 1/8W	28480	0757-0394
A105R40	0757-0403		R:FXD MET FLM 121 OHM 1% 1/8W	28480	0757-0403
A105R41	0757-0403		R:FXD MET FLM 121 OHM 1% 1/8W	28480	0757-0403
A105R42	0757-0403		R:FXD MET FLM 121 OHM 1% 1/8W	28480	0757-0403
A105R43	0757-0403		R:FXD MET FLM 121 OHM 1% 1/8W	28480	0757-0403
A105R44	0757-0394		R:FXD MET FLM 51.1 OHM 1% 1/8W	28480	0757-0394
A105R45	0757-0403		R:FXD MET FLM 121 OHM 1% 1/8W	28480	0757-0403

Table 2-16. A105, A108 Inhibit Driver Card (16K), Replaceable Parts (Continued)

Reference Designation	HP Part Number	Qty	Description	Mfr Code	Mfr Part Number
A105R46	0757-0403		R:FXD MET FLM 121 OHM 1% 1/8W	28480	0757-0403
A105R47	0757-0403		R:FXD MET FLM 121 OHM 1% 1/8W	28480	0757-0403
A105R48	0757-0403		R:FXD MET FLM 121 OHM 1% 1/8W	28480	0757-0403
A105R49	0757-0394		R:FXD MET FLM 51.1 OHM 1% 1/8W	28480	0757-0394
A105R50	0757-0403		R:FXD MET FLM 121 OHM 1% 1/8W	28480	0757-0403
A105R51	0757-0403		R:FXD MET FLM 121 OHM 1% 1/8W	28480	0757-0403
A105R52	0757-0403		R:FXD MET FLM 121 OHM 1% 1/8W	28480	0757-0403
A105R53	0757-0403		R:FXD MET FLM 121 OHM 1% 1/8W	28480	0757-0403
A105R54	0757-0394		R:FXD MET FLM 51.1 OHM 1% 1/8W	28480	0757-0394
A105R55	0757-0403		R:FXD MET FLM 121 OHM 1% 1/8W	28480	0757-0403
A105R56	0757-0403		R:FXD MET FLM 121 OHM 1% 1/8W	28480	0757-0403
A105R57	0757-0403		R:FXD MET FLM 121 OHM 1% 1/8W	28480	0757-0403
A105R58	0757-0403		R:FXD MET FLM 121 OHM 1% 1/8W	28480	0757-0403
A105R59	0757-0394		R:FXD MET FLM 51.1 OHM 1% 1/8W	28480	0757-0394
A105R60	0757-0403		R:FXD MET FLM 121 OHM 1% 1/8W	28480	0757-0403
A105R61	0757-0403		R:FXD MET FLM 121 OHM 1% 1/8W	28480	0757-0403
A105R62	0757-0403		R:FXD MET FLM 121 OHM 1% 1/8W	28480	0757-0403
A105R63	0757-0403		R:FXD MET FLM 121 OHM 1% 1/8W	28480	0757-0403
A105R64	0757-0394		R:FXD MET FLM 51.1 OHM 1% 1/8W	28480	0757-0394
A105R65	0757-0403		R:FXD MET FLM 121 OHM 1% 1/8W	28480	0757-0403
A105R66	0757-0403		R:FXD MET FLM 121 OHM 1% 1/8W	28480	0757-0403
A105R67	0757-0403		R:FXD MET FLM 121 OHM 1% 1/8W	28480	0757-0403
A105R68	0757-0403		R:FXD MET FLM 121 OHM 1% 1/8W	28480	0757-0403
A105R69	0757-0394		R:FXD MET FLM 51.1 OHM 1% 1/8W	28480	0757-0394
A105R70	0757-0403		R:FXD MET FLM 121 OHM 1% 1/8W	28480	0757-0403
A105R71	0757-0403		R:FXD MET FLM 121 OHM 1% 1/8W	28480	0757-0403
A105R72	0757-0403		R:FXD MET FLM 121 OHM 1% 1/8W	28480	0757-0403
A105R73	0757-0403		R:FXD MET FLM 121 OHM 1% 1/8W	28480	0757-0403
A105R74	0757-0394		R:FXD MET FLM 51.1 OHM 1% 1/8W	28480	0757-0394
A105R75	0757-0403		R:FXD MET FLM 121 OHM 1% 1/8W	28480	0757-0403
A105R76	0757-0403		R:FXD MET FLM 121 OHM 1% 1/8W	28480	0757-0403
A105R77	0757-0403		R:FXD MET FLM 121 OHM 1% 1/8W	28480	0757-0403
A105R78	0757-0403		R:FXD MET FLM 121 OHM 1% 1/8W	28480	0757-0403
A105R79	0757-0394		R:FXD MET FLM 51.1 OHM 1% 1/8W	28480	0757-0394
A105R80	0757-0403		R:FXD MET FLM 121 OHM 1% 1/8W	28480	0757-0403
A105R81	0757-0403		R:FXD MET FLM 121 OHM 1% 1/8W	28480	0757-0403
A105R82	0757-0403		R:FXD MET FLM 121 OHM 1% 1/8W	28480	0757-0403
A105R83	0757-0403		R:FXD MET FLM 121 OHM 1% 1/8W	28480	0757-0403
A105R84	0757-0394		R:FXD MET FLM 51.1 OHM 1% 1/8W	28480	0757-0394
A105R85	0757-0403		R:FXD MET FLM 121 OHM 1% 1/8W	28490	0757-0403
A105R86	0757-0403		R:FXD MET FLM 121 OHM 1% 1/8W	28480	0757-0403
A105R87	0757-0403		R:FXD MET FLM 121 OHM 1% 1/8W	28480	0757-0403
A105R88	0757-0403		R:FXD MET FLM 121 OHM 1% 1/8W	28480	0757-0403
A105T1 THRU A105T17	9100-3180	17	TRANSFORMER	28480	9100-3180
A105U11	1820-0140	2	IC:TTL DUAL 4-INPT AND BUFFER	04713	MC3026P
A105U12	1820-0621	17	IC:TTL QUAD 2-INPT NAND BUFFER W/OPEN C	01295	SN7438N
A105U13	1820-0621		IC:TTL QUAD 2-INPT NAND BUFFER W/OPEN C	01295	SN7438N
A105U14	1820-0621		IC:TTL QUAD 2-INPT NAND BUFFER W/OPEN C	01295	SN7438N
A105U15	1820-0621		IC:TTL QUAD 2-INPT NAND BUFFER W/OPEN C	01295	SN7438N
A105U16	1820-0621		IC:TTL QUAD 2-INPT NAND BUFFER W/OPEN C	01295	SN7438N
A105U21	1820-0140		IC:TTL DUAL 4-INPT AND BUFFER	04713	MC3026P
A105U31	1820-0621		IC:TTL QUAD 2-INPT NAND BUFFER W/OPEN C	01295	SN7438N
A105U32	1820-0621		IC:TTL QUAD 2-INPT NAND BUFFER W/OPEN C	01295	SN7438N
A105U33	1820-0621		IC:TTL QUAD 2-INPT NAND BUFFER W/OPEN C	01295	SN7438N
A105U34	1820-0621		IC:TTL QUAD 2-INPT NAND BUFFER W/OPEN C	01295	SN7438N
A105U35	1820-0621		IC:TTL QUAD 2-INPT NAND BUFFER W/OPEN C	01295	SN7438N
A105U36	1820-0621		IC:TTL QUAD 2-INPT NAND BUFFER W/OPEN C	01295	SN7438N
A105U41	1820-0621		IC:TTL QUAD 2-INPT NAND BUFFER W/OPEN C	01295	SN7438N
A105U42	1820-0621		IC:TTL QUAD 2-INPT NAND BUFFER W/OPEN C	01295	SN7438N
A105U43	1820-0621		IC:TTL QUAD 2-INPT NAND BUFFER W/OPEN C	01295	SN7438N
A105U44	1820-0621		IC:TTL QUAD 2-INPT NAND BUFFER W/OPEN C	01295	SN7438N
A105U45	1820-0621		IC:TTL QUAD 2-INPT NAND BUFFER W/OPEN C	01295	SN7438N
A105U46	1820-0621		IC:TTL QUAD 2-INPT NAND BUFFER W/OPEN C	01295	SN7438N
A108			SAME AS A105, USE PREFIX A108		

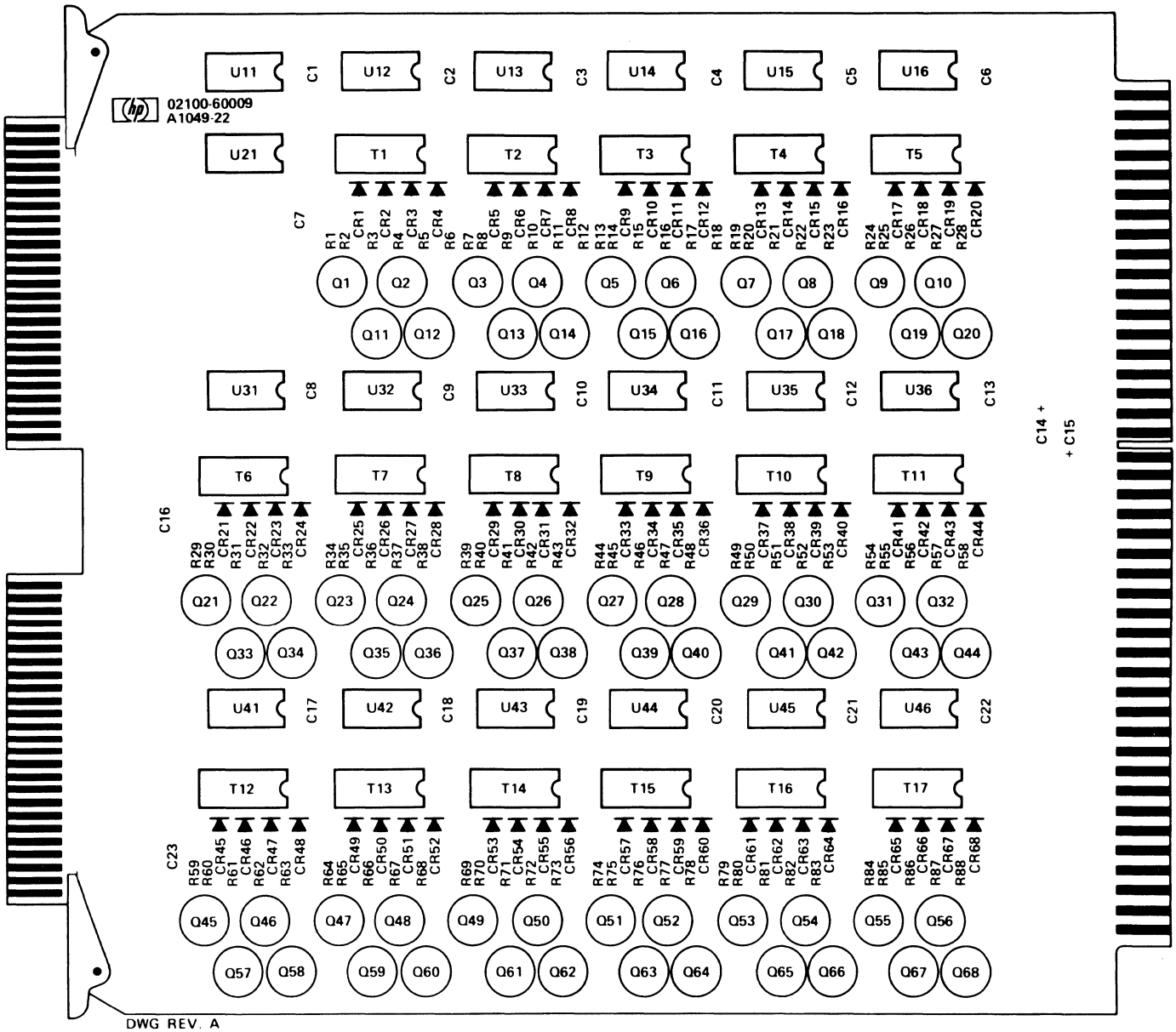

Figure 2-16. A105, A108 Inhibit Driver Card (16K), Parts Location Diagram

Table 2-17. A106 Inhibit Driver Load Card, Replaceable Parts

Reference Designation	HP Part Number	Qty	Description	Mfr Code	Mfr Part Number
A106	C2100-60010	1	INHIBIT DRIVER LOAD CARD	28480	02100-60010
A106C1 THRU A106C17	0160-3871	17	C:FXD MICA 2000 PF 5% 100VDCW	72136	RDM19F202JIS
A106C18 THRU A106C34	0160-3901	17	C:FXD CER 2.2 UF 20% 25VDCW	56289	5C120-CML
A106C35	0180-0094	12	C:FXD ELECT 100 UF +75-10% 25VDCW	56289	30D107G025DD2-DSM
A106C36	0180-0094		C:FXD ELECT 100 UF +75-10% 25VDCW	56289	30D107G025DD2-DSM
A106C37	0180-0094		C:FXD ELECT 100 UF +75-10% 25VDCW	56289	30D107G025DD2-DSM
A106C38	0180-0094		C:FXD ELECT 100 UF +75-10% 25VDCW	56289	30D107G025DD2-DSM
A106C39	0180-0094		C:FXD ELECT 100 UF +75-10% 25VDCW	56289	30D107G025DD2-DSM
A106C40	0180-0094		C:FXD ELECT 100 UF +75-10% 25VDCW	56289	30D107G025DD2-DSM
A106C41	0180-0094		C:FXD ELECT 100 UF +75-10% 25VDCW	56289	30D107G025DD2-DSM
A106C42	0180-0094		C:FXD ELECT 100 UF +75-10% 25VDCW	56289	30D107G025DD2-DSM
A106C43	0180-0094		C:FXD ELECT 100 UF +75-10% 25VDCW	56289	30D107G025DD2-DSM
A106C44	0180-0094		C:FXD ELECT 100 UF +75-10% 25VDCW	56289	30D107G025DD2-DSM
A106C45	0180-0094		C:FXD ELECT 100 UF +75-10% 25VDCW	56289	30D107G025DD2-DSM
A106C46	0180-0094		C:FXD ELECT 100 UF +75-10% 25VDCW	56289	30D107G025DD2-DSM
A106R1 THRU A106R17	0811-2988	17	R:FXD WW 22 OHM 1% 7W	28480	0811-2988
A106R18	0811-2031	1	R:FXD WW 815 OHM 3% 1/4W	28480	0811-2031

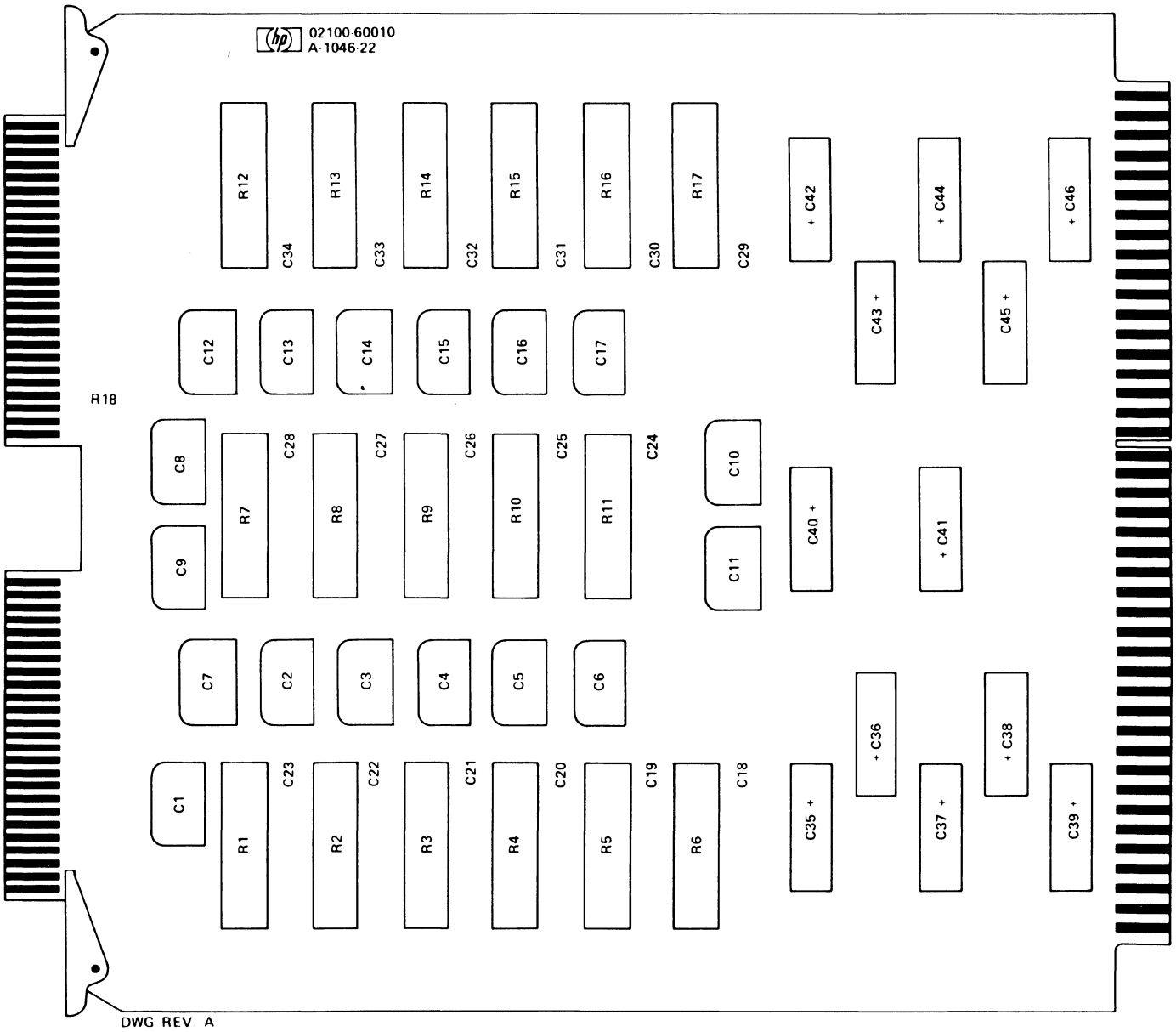

Figure 2-17. A106 Inhibit Driver Load Card, Parts Location Diagram

Table 2-18. A107 Data Control Card, Replaceable Parts

Reference Designation	HP Part Number	Qty	Description	Mfr Code	Mfr Part Number
A107	C2100-60011	1	DATA CONTROL CARD	28480	02100-60011
A107C1	0160-2055	17	C:FXD CER 0.01 UF +80-20% 100VDCW	56289	C023F101F103ZS22-CDH
A107C2	0160-2055		C:FXD CER 0.01 UF +80-20% 100VDCW	56289	C023F101F103ZS22-CDH
A107C3	0180-0197	6	C:FXD ELECT 2.2 UF 10% 20VDCW	56289	150D225X9020A2-DYS
A107C4	0180-0197		C:FXD ELECT 2.2 UF 10% 20VDCW	56289	150D225X9020A2-DYS
A107C5	0160-2055		C:FXD CER 0.01 UF +80-20% 100VDCW	56289	C023F101F103ZS22-CDH
A107C6	0160-2055		C:FXD CER 0.01 UF +80-20% 100VDCW	56289	C023F101F103ZS22-CDH
A107C7	0160-0127	7	C:FXD CER 1.0 UF 20% 25VDCW	56289	5C13CS-CML
A107C8	0160-2055		C:FXD CER 0.01 UF +80-20% 100VDCW	56289	C023F101F103ZS22-CDH
A107C9	0160-2055		C:FXD CER 0.01 UF +80-20% 100VDCW	56289	C023F101F103ZS22-CDH
A107C10	0160-0127		C:FXD CER 1.0 UF 20% 25VDCW	56289	5C13CS-CML
A107C11	0160-0127		C:FXD CER 1.0 UF 20% 25VDCW	56289	5C13CS-CML
A107C12	0160-2055		C:FXD CER 0.01 UF +80-20% 100VDCW	56289	C023F101F103ZS22-CDH
A107C13	0160-2199	2	C:FXD MICA 30 PF 5% 300VDCW	28480	0160-2199
A107C14	0160-2055		C:FXD CER 0.01 UF +80-20% 100VDCW	56289	C023F101F103ZS22-CDH
A107C15	0160-2199		C:FXD MICA 30 PF 5% 300VDCW	28480	0160-2199
A107C16	0140-0196	1	C:FXD MICA 150 PF 5%	72136	RDM15F151J3C
A107C17	0140-0198	1	C:FXD MICA 200 PF 5%	72136	RDM15F201J3C
A107C19	0160-2055		C:FXD CER 0.01 UF +80-20% 100VDCW	56289	C023F101F103ZS22-CDH
A107C20	0180-0197		C:FXD ELECT 2.2 UF 10% 20VDCW	56289	150D225X9020A2-DYS
A107C21	0160-0127		C:FXD CER 1.0 UF 20% 25VDCW	56289	5C13CS-CML
A107C22	0160-0127		C:FXD CER 1.0 UF 20% 25VDCW	56289	5C13CS-CML
A107C23	0180-0197		C:FXD ELECT 2.2 UF 10% 20VDCW	56289	150D225X9020A2-DYS
A107C24	0160-0127		C:FXD CER 1.0 UF 20% 25VDCW	56289	5C13CS-CML
A107C25	0160-0127		C:FXD CER 1.0 UF 20% 25VDCW	56289	5C13CS-CML
A107C26	0160-2055		C:FXD CER 0.01 UF +80-20% 100VDCW	56289	C023F101F103ZS22-CDH
A107C27	0180-0197		C:FXD ELECT 2.2 UF 10% 20VDCW	56289	150D225X9020A2-DYS
A107C28	0180-0197		C:FXD ELECT 2.2 UF 10% 20VDCW	56289	150D225X9020A2-DYS
A107C29	0160-2055		C:FXD CER 0.01 UF +80-20% 100VDCW	56289	C023F101F103ZS22-CDH
A107C30	0160-2055		C:FXD CER 0.01 UF +80-20% 100VDCW	56289	C023F101F103ZS22-CDH
A107C31	0160-2055		C:FXD CER 0.01 UF +80-20% 100VDCW	56289	C023F101F103ZS22-CDH
A107C32	0160-2055		C:FXD CER 0.01 UF +80-20% 100VDCW	56289	C023F101F103ZS22-CDH
A107C33	0160-2055		C:FXD CER 0.01 UF +80-20% 100VDCW	56289	C023F101F103ZS22-CDH
A107C34	0160-2055		C:FXD CER 0.01 UF +80-20% 100VDCW	56289	C023F101F103ZS22-CDH
A107C35	0140-0199	1	C:FXD MICA 240 PF 5%	28480	0140-0199
A107C36	0160-2055		C:FXD CER 0.01 UF +80-20% 100VDCW	56289	C023F101F103ZS22-CDH
A107CR1	1910-0016	5	DIODE:GERMANIUM 100MA/0.85V 60PIV	93332	D2361
A107CR2	1910-0016		DIODE:GERMANIUM 100MA/0.85V 60PIV	93332	D2361
A107CR3	1910-0016		DIODE:GERMANIUM 100MA/0.85V 60PIV	93332	D2361
A107CR4	1990-0326	1	DIODE:VISIBLE LIGHT EMITTER	28480	1990-0326
A107CR5	1910-0016		DIODE:GERMANIUM 100MA/0.85V 60PIV	93332	D2361
A107CR6	1910-0016		DIODE:GERMANIUM 100MA/0.85V 60PIV	93332	D2361
A107CR7	5080-0059	7	PIN:DIODE	28480	5080-0059
A107CR8	5080-0059		PIN:DIODE	28480	5080-0059
A107CR9	5080-0059		PIN:DIODE	28480	5080-0059
A107CR10	5080-0059		PIN:DIODE	28480	5080-0059
A107CR11	5080-0059		PIN:DIODE	28480	5080-0059
A107CR12	5080-0059		PIN:DIODE	28480	5080-0059
A107CR13	5080-0059		PIN:DIODE	28480	5080-0059
A107DL1	1810-0064	1	DELAY LINE:	01961	GG4
A107E1 THRU A107E9	0360-0294	9	TERMINAL:SOLDER POINT	28480	0360-0294
A107Q2	1854-0019	7	TSTR:SI NPN	28480	1854-0019
A107Q3	1854-0019		TSTR:SI NPN	28480	1854-0019
A107Q4	1854-0019		TSTR:SI NPN	28480	1854-0019
A107Q5	1854-0019		TSTR:SI NPN	28480	1854-0019
A107Q6	1854-0019		TSTR:SI NPN	28480	1854-0019
A107Q7	1854-0019		TSTR:SI NPN	28480	1854-0019
A107Q8	1854-0019		TSTR:SI NPN	28480	1854-0019
A107R3	0698-0082	21	R:FXD MET FLM 464 OHM 1% 1/8W	28480	0698-0082
A107R4	0698-0082		R:FXD MET FLM 464 OHM 1% 1/8W	28480	0698-0082
A107R7	0698-3444	17	R:FXD MET FLM 316 OHM 1% 1/8W	28480	0698-3444
A107R8	0698-3444		R:FXD MET FLM 316 OHM 1% 1/8W	28480	0698-3444
A107R9	0698-3444		R:FXD MET FLM 316 OHM 1% 1/8W	28480	0698-3444
A107R10	0698-3444		R:FXD MET FLM 316 OHM 1% 1/8W	28480	0698-3444
A107R11	0698-3444		R:FXD MET FLM 316 OHM 1% 1/8W	28480	0698-3444
A107R12	0698-3444		R:FXD MET FLM 316 OHM 1% 1/8W	28480	0698-3444
A107R13	0698-3444		R:FXD MET FLM 316 OHM 1% 1/8W	28480	0698-3444
A107R17(NOTE 2)	0698-0082		R:FXD MET FLM 464 OHM 1% 1/8W	28480	0698-0082
A107R17(NOTE 3)	0698-3442	1	R:FXD MET FLM 237 OHM 1% 1/8W	28480	0698-3442
A107R18	0757-0280	13	R:FXD MET FLM 1K OHM 1% 1/8W	28480	0757-0280
A107R19	0757-0280		R:FXD MET FLM 1K OHM 1% 1/8W	28480	0757-0280

NOTES: 2. Used on card Rev. 1132.
3. First used on card Rev. 1312.

Table 2-18. A107 Data Control Card, Replaceable Parts (Continued)

Reference Designation	HP Part Number	Qty	Description	Mfr Code	Mfr Part Number
A107R22	0698-0082		R:FXD MET FLM 464 OHM 1% 1/8W	28480	0698-0082
A107R23	0698-0082		R:FXD MET FLM 464 OHM 1% 1/8W	28480	0698-0082
A107R24	0698-3444		R:FXD MET FLM 316 OHM 1% 1/8W	28480	0698-3444
A107R25	0698-3443	1	R:FXD MET FLM 287 OHM 1% 1/8W	28480	0698-3443
A107R26	0757-0280		R:FXD MET FLM 1K OHM 1% 1/8W	28480	0757-0280
A107R27	0698-0082		R:FXD MET FLM 464 OHM 1% 1/8W	28480	0698-0082
A107R28	0698-0082		R:FXD MET FLM 464 OHM 1% 1/8W	28480	0698-0082
A107R29	0698-3444		R:FXD MET FLM 316 OHM 1% 1/8W	28480	0698-3444
A107R30	0698-0082		R:FXD MET FLM 464 OHM 1% 1/8W	28480	0698-0082
A107R33	0698-0082		R:FXD MET FLM 464 OHM 1% 1/8W	28480	0698-0082
A107R36	0757-0401	5	R:FXD MET FLM 100 OHM 1% 1/8W	28480	0757-0401
A107R37	0757-0401		R:FXD MET FLM 100 OHM 1% 1/8W	28480	0757-0401
A107R38	0698-3442	3	R:FXD MET FLM 237 OHM 1% 1/8W	28480	0698-3442
A107R40	0698-3151	5	R:FXD MET FLM 2.87K OHM 1% 1/8W	28480	0698-3151
A107R41	0698-3157	5	R:FXD MET FLM 19.6K OHM 1% 1/8W	28480	0698-3157
A107R42	0698-3151		R:FXD MET FLM 2.87K OHM 1% 1/8W	28480	0698-3151
A107R43	0698-3157		R:FXD MET FLM 19.6K OHM 1% 1/8W	28480	0698-3157
A107R44	0757-0441	3	R:FXD MET FLM 8.25K OHM 1% 1/8W	28480	0757-0441
A107R45	0757-0280		R:FXD MET FLM 1K OHM 1% 1/8W	28480	0757-0280
A107R46	0757-0441		R:FXD MET FLM 8.25K OHM 1% 1/8W	28480	0757-0441
A107R47	0757-0280		R:FXD MET FLM 1K OHM 1% 1/8W	28480	0757-0280
A107R48	0757-0401		R:FXD MET FLM 100 OHM 1% 1/8W	28480	0757-0401
A107R49	0698-3446	2	R:FXD MET FLM 383 OHM 1% 1/8W	28480	0698-3446
A107R50	0698-3446		R:FXD MET FLM 383 OHM 1% 1/8W	28480	0698-3446
A107R52	0698-3444		R:FXD MET FLM 316 OHM 1% 1/8W	28480	0698-3444
A107R53	0698-3444		R:FXD MET FLM 316 OHM 1% 1/8W	28480	0698-3444
A107R54	0698-0082		R:FXD MET FLM 464 OHM 1% 1/8W	28480	0698-0082
A107R55	0698-0082		R:FXD MET FLM 464 OHM 1% 1/8W	28480	0698-0082
A107R56	0698-0082		R:FXD MET FLM 464 OHM 1% 1/8W	28480	0698-0082
A107R57	0698-0082		R:FXD MET FLM 464 OHM 1% 1/8W	28480	0698-0082
A107R58	0698-3444		R:FXD MET FLM 316 OHM 1% 1/8W	28480	0698-3444
A107R59	0698-3444		R:FXD MET FLM 316 OHM 1% 1/8W	28480	0698-3444
A107R60	0757-0280		R:FXD MET FLM 1K OHM 1% 1/8W	28480	0757-0280
A107R61	0757-0284	1	R:FXD MET FLM 150 OHM 1% 1/8W	28480	0757-0284
A107R62	0698-0083	5	R:FXD MET FLM 1.96K OHM 1% 1/8W	28480	0698-0083
A107R63	0698-0083		R:FXD MET FLM 1.96K OHM 1% 1/8W	28480	0698-0083
A107R64	0698-0083		R:FXD MET FLM 1.96K OHM 1% 1/8W	28480	0698-0083
A107R65	0698-0083		R:FXD MET FLM 1.96K OHM 1% 1/8W	28480	0698-0083
A107R66	0698-3151		R:FXD MET FLM 2.87K OHM 1% 1/8W	28480	0698-3151
A107R67	2100-1738	2	R:VAR FLM 10K OHM 10% LIN 1/2W	28480	2100-1738
A107R68	2100-1738		R:VAR FLM 10K OHM 10% LIN 1/2W	28480	2100-1738
A107R69	0757-0401		R:FXD MET FLM 100 OHM 1% 1/8W	28480	0757-0401
A107R70	0698-3157		R:FXD MET FLM 19.6K OHM 1% 1/8W	28480	0698-3157
A107R71	0698-3151		R:FXD MET FLM 2.87K OHM 1% 1/8W	28480	0698-3151
A107R72	0698-3157		R:FXD MET FLM 19.6K OHM 1% 1/8W	28480	0698-3157
A107R73	0698-3151		R:FXD MET FLM 2.87K OHM 1% 1/8W	28480	0698-3151
A107R74	0698-3157		R:FXD MET FLM 19.6K OHM 1% 1/8W	28480	0698-3157
A107R75	0698-0083		R:FXD MET FLM 1.96K OHM 1% 1/8W	28480	0698-0083
A107R76	0698-3444		R:FXD MET FLM 316 OHM 1% 1/8W	28480	0698-3444
A107R77	0757-0441		R:FXD MET FLM 8.25K OHM 1% 1/8W	28480	0757-0441
A107R78	0757-0280		R:FXD MET FLM 1K OHM 1% 1/8W	28480	0757-0280
A107R79	0698-0082		R:FXD MET FLM 464 OHM 1% 1/8W	28480	0698-0082
A107R80	0698-0082		R:FXD MET FLM 464 OHM 1% 1/8W	28480	0698-0082
A107R81	0698-0082		R:FXD MET FLM 464 OHM 1% 1/8W	28480	0698-0082
A107R82	0698-0082		R:FXD MET FLM 464 OHM 1% 1/8W	28480	0698-0082
A107R83	0757-0280		R:FXD MET FLM 1K OHM 1% 1/8W	28480	0757-0280
A107R84	0698-3444		R:FXD MET FLM 316 OHM 1% 1/8W	28480	0698-3444
A107R85	0698-3444		R:FXD MET FLM 316 OHM 1% 1/8W	28480	0698-3444
A107R86	0698-3444		R:FXD MET FLM 316 OHM 1% 1/8W	28480	0698-3444
A107R87	0698-0082		R:FXD MET FLM 464 OHM 1% 1/8W	28480	0698-0082
A107R88	0698-0082		R:FXD MET FLM 464 OHM 1% 1/8W	28480	0698-0082
A107R89	0757-0280		R:FXD MET FLM 1K OHM 1% 1/8W	28480	0757-0280
A107R90	0757-0316	1	R:FXD MET FLM 42.2 OHM 1% 1/8W	28480	0757-0316
A107R91	0757-0401		R:FXD MET FLM 100 OHM 1% 1/8W	28480	0757-0401
A107R92	0757-0280		R:FXD MET FLM 1K OHM 1% 1/8W	28480	0757-0280
A107R93	0757-0274	2	R:FXD MET FLM 1.21K OHM 1% 1/8W	28480	0757-0274
A107R94	0757-0274		R:FXD MET FLM 1.21K OHM 1% 1/8W	28480	0757-0274
A107R96	0698-3442		R:FXD MET FLM 237 OHM 1% 1/8W	28480	0698-3442
A107R97	0757-0280		R:FXD MET FLM 1K OHM 1% 1/8W	28480	0757-0280
A107R98	0757-0416	4	R:FXD MET FLM 511 OHM 1% 1/8W	28480	0757-0416
A107R99	0757-0416		R:FXD MET FLM 511 OHM 1% 1/8W	28480	0757-0416
A107R101	0698-3442		R:FXD MET FLM 237 OHM 1% 1/8W	28480	0698-3442
A107R102	0698-0082		R:FXD MET FLM 464 OHM 1% 1/8W	28480	0698-0082
A107R103	0757-0416		R:FXD MET FLM 511 OHM 1% 1/8W	28480	0757-0416
A107R104	0698-0082		R:FXD MET FLM 464 OHM 1% 1/8W	28480	0698-0082

Table 2-18. A107 Data Control Card, Replaceable Parts (Continued)

Reference Designation	HP Part Number	Qty	Description	Mfr Code	Mfr Part Number
A107R105	0698-3438	1	R:FXD MET FLM 147 OHM 1% 1/8W	28480	0698-3438
A107R106	0698-3445	9	R:FXD MET FLM 348 OHM 1% 1/8W	28480	0698-3445
A107R107	0757-0416		R:FXD MET FLM 511 OHM 1% 1/8W	28480	0757-0416
A107R108	0757-0280		R:FXD MET FLM 1K OHM 1% 1/8W	28480	0757-0280
A107R109	0698-3132	2	R:FXD FLM 261 OHM 1% 1/8W	28480	0698-3132
A107R110	0698-3445		R:FXD MET FLM 348 OHM 1% 1/8W	28480	0698-3445
A107R111	0698-3445		R:FXD MET FLM 348 OHM 1% 1/8W	28480	0698-3445
A107R112	0698-3445		R:FXD MET FLM 348 OHM 1% 1/8W	28480	0698-3445
A107R113	0698-3445		R:FXD MET FLM 348 OHM 1% 1/8W	28480	0698-3445
A107R114	0698-3445		R:FXD MET FLM 348 OHM 1% 1/8W	28480	0698-3445
A107R115	0698-3445		R:FXD MET FLM 348 OHM 1% 1/8W	28480	0698-3445
A107R116	0698-3445		R:FXD MET FLM 348 OHM 1% 1/8W	28480	0698-3445
A107R117	0698-3445		R:FXD MET FLM 348 OHM 1% 1/8W	28480	0698-3445
A107R118	0757-0280		R:FXD MET FLM 1K OHM 1% 1/8W	28480	0757-0280
A107R119	0698-3132		R:FXD FLM 261 OHM 1% 1/8W	28480	0698-3132
A107S1	3101-1213	1	SWITCH:TOGGLE DPST-DB SUB-MINIATURE	81640	T8001
A107U11	1820-0971	8	IC:CTL DUAL 2W-2-INPT AND/OR GATE	07263	U6A997179X
A107U12	1820-0435	2	IC:TTL 8-BIT ODD/EVEN GEN./CHECKER	01295	SN74180N
A107U13	1820-0301	4	IC:TTL QUAD BI-STABLE D-LATCH	01295	SN7475N
A107U14	1820-0971		IC:CTL DUAL 2W-2-INPT AND/OR GATE	07263	U6A997179X
A107U16	1820-0485	3	IC:CTL HEX LEVEL RESTORER	07263	U68981649X
A107U17	1820-0233	4	IC:TTL SYNUP-ON 4-BIT BINARY COUNTER	01295	SN74193N
A107U21	1820-0971		IC:CTL DUAL 2W-2-INPT AND/OR GATE	07263	U6A997179X
A107U22	1820-0301		IC:TTL QUAD BI-STABLE D-LATCH	01295	SN7475N
A107U23	1820-0616	4	IC:TTL 4-BIT 2-INPT MULTIPLEXER	07263	U78932259X
A107U24	1820-0971		IC:CTL DUAL 2W-2-INPT AND/OR GATE	07263	U6A997179X
A107U25	1820-0301		IC:TTL QUAD BI-STABLE D-LATCH	01295	SN7475N
A107U26	1820-0485		IC:CTL HEX LEVEL RESTORER	07263	U68981649X
A107U27	1820-0233		IC:TTL SYNUP-ON 4-BIT BINARY COUNTER	01295	SN74193N
A107U32	1820-0616		IC:TTL 4-BIT 2-INPT MULTIPLEXER	07263	U78932259X
A107U35	1820-0616		IC:TTL 4-BIT 2-INPT MULTIPLEXER	07263	U78932259X
A107U36	1820-0971		IC:CTL DUAL 2W-2-INPT AND/OR GATE	07263	U6A997179X
A107U37	1820-0233		IC:TTL SYNUP-ON 4-BIT BINARY COUNTER	01295	SN74193N
A107U42	1820-0140	1	IC:TTL DUAL 4-INPT AND BUFFER	04713	MC3026P
A107U43	1820-0207	3	IC:TTL MONOSTABLE MULTIVIBRATOR	28480	1820-0207
A107U44	1820-0424	2	IC:TTL HS HEX INVERTER	04713	SN74H04N
A107U45	1820-0376	1	IC:TTL DUAL 4-INPT NAND POWER GATE	01295	SN74H40N
A107U46	1820-0971		IC:CTL DUAL 2W-2-INPT AND/OR GATE	07263	U6A997179X
A107U47	1820-0233		IC:TTL SYNUP-ON 4-BIT BINARY COUNTER	01295	SN74193N
A107U53	1820-0207		IC:TTL MONOSTABLE MULTIVIBRATOR	28480	1820-0207
A107U54	1820-0966	1	IC:CTL DUAL 2-INPT AND 2W AND/OR GATE	14433	MIC 966
A107U55	1820-0301		IC:TTL QUAD BI-STABLE D-LATCH	01295	SN7475N
A107U56	1820-0435		IC:TTL 8-BIT ODD/EVEN GEN./CHECKER	01295	SN74180N
A107U57	1820-0205	3	IC:TTL QUAD 2-INPT OR GATE	28480	1820-0205
A107U63	1820-0207		IC:TTL MONOSTABLE MULTIVIBRATOR	28480	1820-0207
A107U64	1820-0329	1	IC:TTL QUAD 2-INPT NOR GATE	04713	SN7402N
A107U65	1820-0616		IC:TTL 4-BIT 2-INPT MULTIPLEXER	07263	U78932259X
A107U66	1820-0971		IC:CTL DUAL 2W-2-INPT AND/OR GATE	07263	U6A997179X
A107U67	1820-0485		IC:CTL HEX LEVEL RESTORER	07263	U68981649X
A107U73	1820-0372	1	IC:TTL TRIPLE 3-INPT AND GATE	28480	1820-0372
A107U74(NOTE 1)	1820-0451	3	IC:TTL DUAL J-K F/F	04713	MC3062P
A107U76	1820-0187	2	IC:CTL DUAL 2-INPT NOR GATE	07263	U6A985249X
A107U81	1820-0370	2	IC:TTL HS QUAD 2-INPT NAND GATE	01295	SN74H00N
A107U82	1820-0141	2	IC:TTL QUAD 2-INPT AND GATE	04713	MC3001P
A107U83	1820-0205		IC:TTL QUAD 2-INPT OR GATE	28480	1820-0205
A107U84	1820-0186	2	IC:CTL DUAL 2-INPT AND GATE	07263	U6A985649X
A107U85	1820-0971		IC:CTL DUAL 2W-2-INPT AND/OR GATE	07263	U6A997179X
A107U86	1820-0187		IC:CTL DUAL 2-INPT NOR GATE	07263	U6A985249X
A107U91	1820-0371	2	IC:TTL HS TRIPLE 3-INPT NAND GATE	01295	SN74H10N
A107U92	1820-0371		IC:TTL HS TRIPLE 3-INPT NAND GATE	01295	SN74H10N
A107U93	1820-0424		IC:TTL HS HEX INVERTER	04713	SN74H04N
A107U95	1820-0141		IC:TTL QUAD 2-INPT AND GATE	04713	MC3001P
A107U96	1820-0482	1	IC:CTL 1 OF 8 DECODER	07263	U68983849X
A107U101	1820-0370		IC:TTL HS QUAD 2-INPT NAND GATE	01295	SN74H00N
A107U102(NOTE 1)	1820-0451		IC:TTL DUAL J-K F/F	04713	MC3062P
A107U103	1820-0619	1	IC:TTL HS DUAL 4-INPT NAND GATE(OPEN C)	01295	SN74H22N
A107U104	1820-0186		IC:CTL DUAL 2-INPT AND GATE	07263	U6A985649X
A107U105(NOTE 1)	1820-0451		IC:TTL DUAL J-K F/F	04713	MC3062P
A107U106	1820-0205		IC:TTL QUAD 2-INPT OR GATE	28480	1820-0205
A107W1	5080-0058	1	CONDUCTOR ASSY	28480	5080-0058

NOTES: 1. Part no. 1820 0695 used on some cards; the two parts are interchangeable.

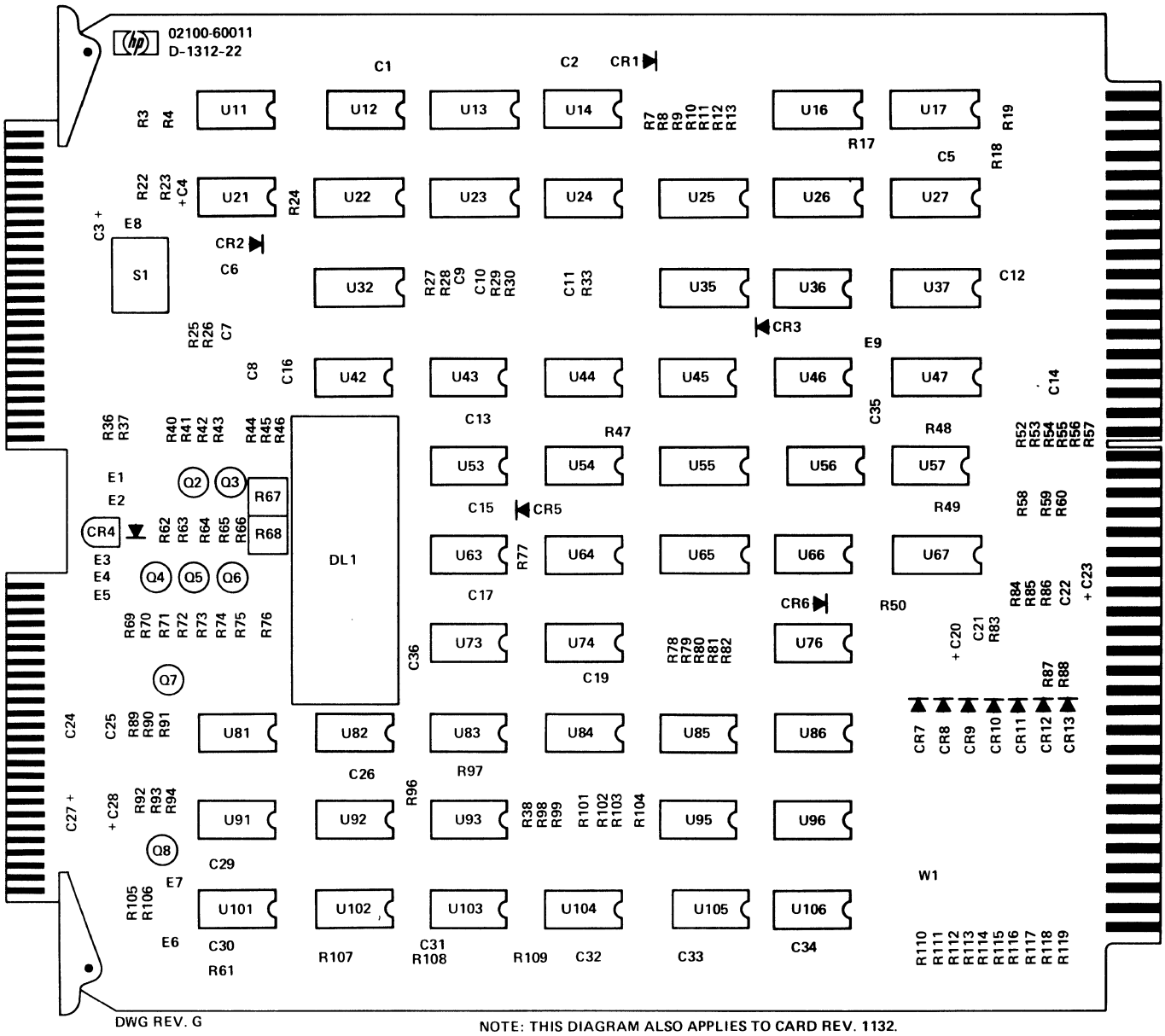

Figure 2-18. A107 Data Control Card, Parts Location Diagram

Table 2-19. Operator Panel Assembly, Replaceable Parts

FIG & INDEX NO.	HP PART NO.	DESCRIPTION	MFR CODE	MFR PART NO.	UNITS PER ASSY
2-19-	No Number	OPERATOR PANEL ASSEMBLY (32, figure 2-1)		No Number	1
1	02100-00025	* Switch Panel	28480	02100-00025	1
2	02100-00026	* Bracket, Mounting	28480	02100-00026	1
		(Attaching Parts)			
3	2360-0197	* Screw, Machine, ph, No. 6-32, 3/8 in.	00000	OBD	4
4	2190-0851	* Washer, Lock, split, No. 6	00000	OBD	4
5	3050-0228	* Washer, Flat, No. 6	00000	OBD	4
6■	2190-0196	* Washer, Nonmetallic, No. 6	00000	OBD	8
		– – – x – – –			
7	02100-20021	* Spacer, Sleeve, Nylon, int-thread, No. 6, 1/4 in. OD, 1-11/32 in. long	28480	02100-20021	2
8	02100-20054	* Spacer, Sleeve, Nylon, int-thread, No. 6, 1/4 in. OD, 1-11/32 in. long	28480	02100-20054	1
9	02100-60015	* Operator Panel Card (A24) (see figure 2-21)	28480	02100-60015	1

NOTE: ■ Part no. 2190-0196 used on early configuratiions. Part no. 2190-0860 washers are cemented to item 9 on later configurations.

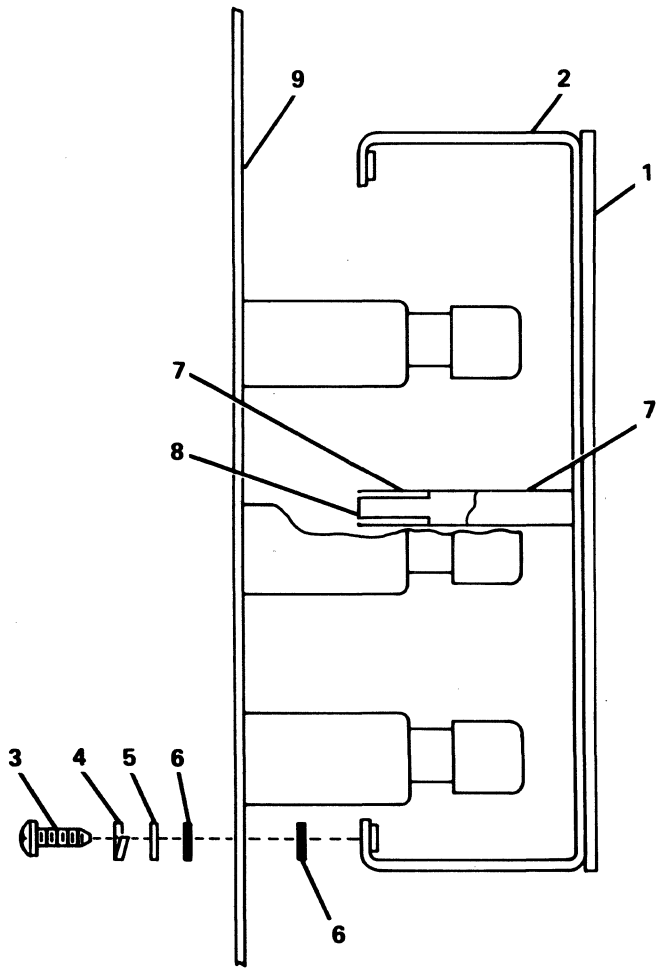

2135-15A

Figure 2-19. Operator Panel Assembly, Exploded View

Table 2-20. Controller Panel Assembly (Option 001), Replaceable Parts

FIG & INDEX NO.	HP PART NO.	DESCRIPTION	MFR CODE	MFR PART NO.	UNITS PER ASSY
2-20-	No Number	CONTROLLER PANEL ASSEMBLY (32, figure 2-1)		No Number	1
1	02100-00130	* Switch Panel	28480	02100-00130	1
2	02100-00129	* Bracket, Mounting	28480	02100-00129	1
		(Attaching Parts)			
3	2360-0197	* Screw, Machine, ph, No. 6-32, 3/8 in.	00000	OBD	7
4	2190-0851	* Washer, Lock, split, No. 6	00000	OBD	7
5	3050-0228	* Washer, Flat, No. 6	00000	OBD	7
6	2190-0196	* Washer, Nonmetallic, No. 6	00000	OBD	8
		– – – x – – –			
7	02100-20021	* Spacer, Sleeve, Nylon, int-thread, No. 6, 1/4 in. OD, 1-11/32 in. long	28480	02100-20021	3
8	02100-60017	* Controller Panel Card (A24) (see figure 2-22)	28480	02100-60017	1

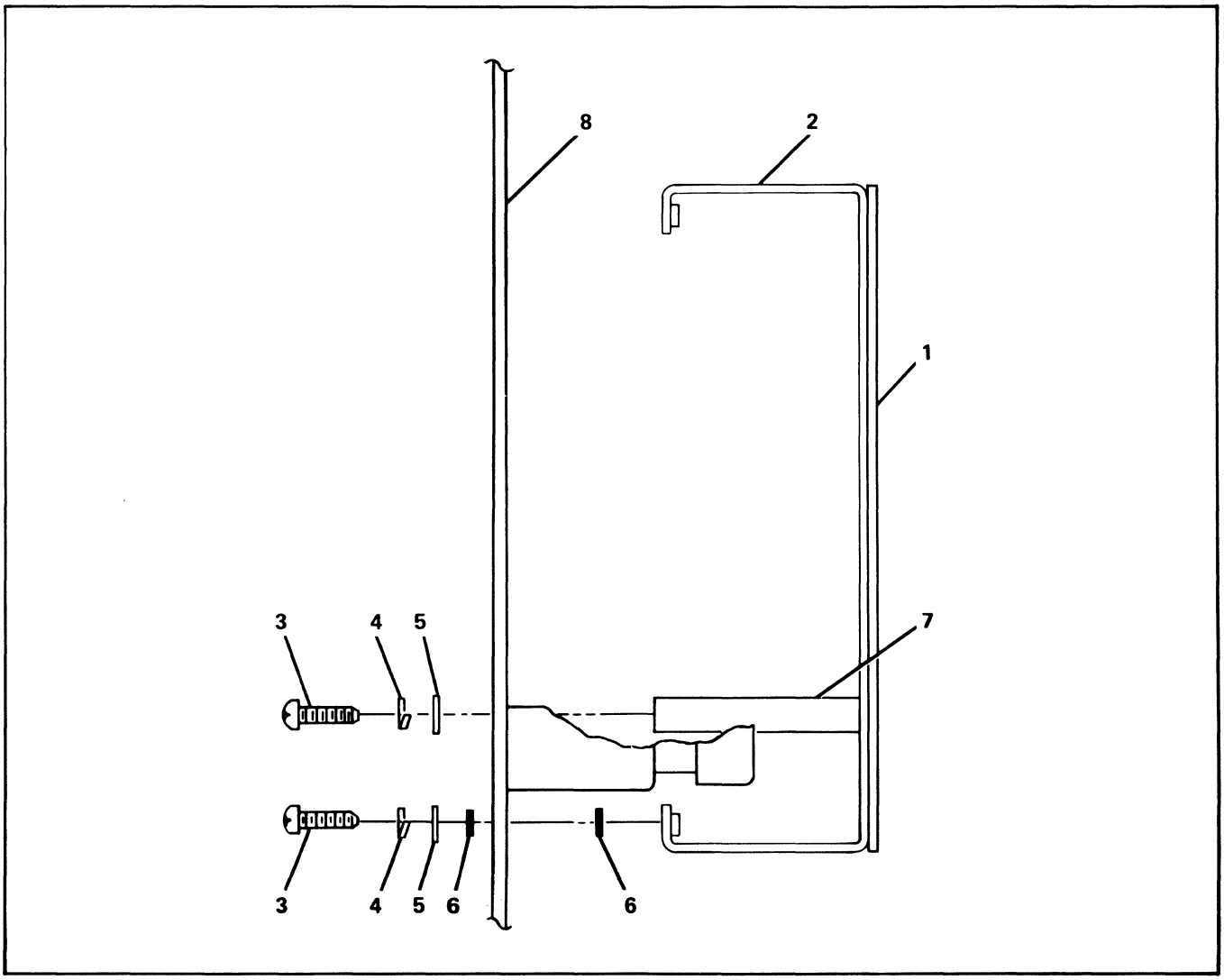

2135-16A

Figure 2-20. Controller Panel Assembly (Option 001), Exploded View

Table 2-21. A24 Operator Panel Card, Replaceable Parts

Reference Designation	HP Part Number	Qty	Description	Mfr Code	Mfr Part Number
A24	02100-60015	1	OPERATOR PANEL CARD	28480	02100-60015
A24C1	0180-0106	22	C:FXD ELECT 60 UF 20% 6VDCW	28480	0180-0106
A24C4	0180-0106		C:FXD ELECT 60 UF 20% 6VDCW	28480	0180-0106
A24C5	0160-2055	26	C:FXD CER 0.01 UF +80-20% 100VDCW	56289	C023F101F103ZS22-CDH
A24C6	0160-2055		C:FXD CER 0.01 UF +80-20% 100VDCW	56289	C023F101F103ZS22-CDH
A24C7	0160-2055		C:FXD CER 0.01 UF +80-20% 100VDCW	56289	C023F101F103ZS22-CDH
A24C8	0160-2055		C:FXD CER 0.01 UF +80-20% 100VDCW	56289	C023F101F103ZS22-CDH
A24C9	0180-0106		C:FXD ELECT 60 UF 20% 6VDCW	28480	0180-0106
A24C10	0160-2055		C:FXD CER 0.01 UF +80-20% 100VDCW	56289	C023F101F103ZS22-CDH
A24C11	0160-2055		C:FXD CER 0.01 UF +80-20% 100VDCW	56289	C023F101F103ZS22-CDH
A24C12	0180-0291	2	C:FXD ELECT 1.0 UF 10% 35VDCW	56289	150D105X9035A2-DYS
A24C13	0180-0106		C:FXD ELECT 60 UF 20% 6VDCW	28480	0180-0106
A24C14	0180-0106		C:FXD ELECT 60 UF 20% 6VDCW	28480	0180-0106
A24C16	0180-0106		C:FXD ELECT 60 UF 20% 6VDCW	28480	0180-0106
A24C17	0180-0106		C:FXD ELECT 60 UF 20% 6VDCW	28480	0180-0106
A24C18	0160-2055		C:FXD CER 0.01 UF +80-20% 100VDCW	56289	C023F101F103ZS22-CDH
A24C19	0160-2055		C:FXD CER 0.01 UF +80-20% 100VDCW	56289	C023F101F103ZS22-CDH
A24C20	0180-0106		C:FXD ELECT 60 UF 20% 6VDCW	28480	0180-0106
A24C21	0160-2055		C:FXD CER 0.01 UF +80-20% 100VDCW	56289	C023F101F103ZS22-CDH
A24C22	0180-0106		C:FXD ELECT 60 UF 20% 6VDCW	28480	0180-0106
A24C23	0180-0106		C:FXD ELECT 60 UF 20% 6VDCW	28480	0180-0106
A24C24	0180-0291		C:FXD ELECT 1.0 UF 10% 35VDCW	56289	150D105X9035A2-DYS
A24C25	0180-0106		C:FXD ELECT 60 UF 20% 6VDCW	28480	0180-0106
A24C26	0180-0106		C:FXD ELECT 60 UF 20% 6VDCW	28480	0180-0106
A24C27	0180-0106		C:FXD ELECT 60 UF 20% 6VDCW	28480	0180-0106
A24C28	0180-0106		C:FXD ELECT 60 UF 20% 6VDCW	28480	0180-0106
A24C29	0180-0106		C:FXD ELECT 60 UF 20% 6VDCW	28480	0180-0106
A24C30	0180-0106		C:FXD ELECT 60 UF 20% 6VDCW	28480	0180-0106
A24C32	0160-2055		C:FXD CER 0.01 UF +80-20% 100VDCW	56289	C023F101F103ZS22-CDH
A24C33	0160-2055		C:FXD CER 0.01 UF +80-20% 100VDCW	56289	C023F101F103ZS22-CDH
A24C34	0160-2055		C:FXD CER 0.01 UF +80-20% 100VDCW	56289	C023F101F103ZS22-CDH
A24C36	0160-2055		C:FXD CER 0.01 UF +80-20% 100VDCW	56289	C023F101F103ZS22-CDH
A24C37	0180-0106		C:FXD ELECT 60 UF 20% 6VDCW	28480	0180-0106
A24C38	0160-2055		C:FXD CER 0.01 UF +80-20% 100VDCW	56289	C023F101F103ZS22-CDH
A24C39	0160-2055		C:FXD CER 0.01 UF +80-20% 100VDCW	56289	C023F101F103ZS22-CDH
A24C41	0180-0106		C:FXD ELECT 60 UF 20% 6VDCW	28480	0180-0106
A24C42	0160-2055		C:FXD CER 0.01 UF +80-20% 100VDCW	56289	C023F101F103ZS22-CDH
A24C43	0160-2055		C:FXD CER 0.01 UF +80-20% 100VDCW	56289	C023F101F103ZS22-CDH
A24C44	0160-2055		C:FXD CER 0.01 UF +80-20% 100VDCW	56289	C023F101F103ZS22-CDH
A24C45	0160-2055		C:FXD CER 0.01 UF +80-20% 100VDCW	56289	C023F101F103ZS22-CDH
A24C46	0160-2055		C:FXD CER 0.01 UF +80-20% 100VDCW	56289	C023F101F103ZS22-CDH
A24C47	0160-2055		C:FXD CER 0.01 UF +80-20% 100VDCW	56289	C023F101F103ZS22-CDH
A24C48	0180-0106		C:FXD ELECT 60 UF 20% 6VDCW	28480	0180-0106
A24C49	0160-2055		C:FXD CER 0.01 UF +80-20% 100VDCW	56289	C023F101F103ZS22-CDH
A24C50	0160-2055		C:FXD CER 0.01 UF +80-20% 100VDCW	56289	C023F101F103ZS22-CDH
A24C51	0160-2055		C:FXD CER 0.01 UF +80-20% 100VDCW	56289	C023F101F103ZS22-CDH
A24C52	0160-2055		C:FXD CER 0.01 UF +80-20% 100VDCW	56289	C023F101F103ZS22-CDH
A24C53	0180-0106		C:FXD ELECT 60 UF 20% 6VDCW	28480	0180-0106
A24C54	0160-2055		C:FXD CER 0.01 UF +80-20% 100VDCW	56289	C023F101F103ZS22-CDH
A24C55	0180-0106		C:FXD ELECT 60 UF 20% 6VDCW	28480	0180-0106
A24C56	0180-0106		C:FXD ELECT 60 UF 20% 6VDCW	28480	0180-0106
A24CR1	1901-0040	1	DIODE:SILICON 30MA 30WV	07263	FDG1088
A24DS1 THRU A24DS38	2140-0364	38	LAMP:INCANDESCENT	28480	2140-0364
A24Q1	1854-0477	4	TSTR:SI NPN	80131	2N2222A
A24Q2	1854-0477		TSTR:SI NPN	80131	2N2222A
A24Q3	1854-0477		TSTR:SI NPN	80131	2N2222A
A24Q4	1854-0477		TSTR:SI NPN	80131	2N2222A
A24R1	1810-0030	10	NETWORK:7 RESISTORS 1K OHM 5% 0.15W EA	28480	1810-0030
A24R2	1810-0030		NETWORK:7 RESISTORS 1K OHM 5% 0.15W EA	28480	1810-0030
A24R3	0698-7260	1	R:FXD FLM 10K OHM 2% 1/8W	28480	0698-7260
A24R4	0698-7236	5	R:FXD FLM 1K OHM 2% 1/8W	28480	0698-7236
A24R5	0698-7244	2	R:FXD FLM 2.15K OHM 2% 1/8W	28480	0698-7244
A24R6	1810-0030		NETWORK:7 RESISTORS 1K OHM 5% 0.15W EA	28480	1810-0030
A24R7	1810-0030		NETWORK:7 RESISTORS 1K OHM 5% 0.15W EA	28480	1810-0030
A24R8	0757-0416	3	R:FXD MET FLM 511 OHM 1% 1/8W	28480	0757-0416
A24R9	0757-0280	2	R:FXD MET FLM 1K OHM 1% 1/8W	28480	0757-0280
A24R10 (NOTE 2)	0757-0442	1	R:FXD MET FLM 10.0K OHM 1% 1/8W	28480	0757-0442
A24R10 (NOTE 1)	0757-0463	1	R:FXD MET FLM 82.5K OHM 1% 1/8W	28480	0757-0463
A24R11	0698-7244		R:FXD FLM 2.15K OHM 2% 1/8W	28480	0698-7244
A24R12	0698-7236		R:FXD FLM 1K OHM 2% 1/8W	28480	0698-7236
A24R13	0698-7229	2	R:FXD FLM 511 OHM 2% 1/8W	28480	0698-7229
A24R14	0698-7236		R:FXD FLM 1K OHM 2% 1/8W	28480	0698-7236
A24R15	1810-0030		NETWORK:7 RESISTORS 1K OHM 5% 0.15W EA	28480	1810-0030
A24R16	1810-0063	3	RESISTIVE NETWORK:7 X 133 OHM 5% 2W EA	28480	1810-0063

NOTE: 1. First used on card rev. 1244.
2. Used on card rev. 1123.

Table 2-21. A24 Operator Panel Card, Replaceable Parts (Continued)

Reference Designation	HP Part Number	Qty	Description	Mfr Code	Mfr Part Number
A24R17	1810-0030		NETWORK:7 RESISTORS 1K OHM 5% 0.15W EA	28480	1810-0030
A24R18	1810-0063		RESISTIVE NETWORK:7 X 133 OHM 5% 2W EA	28480	1810-0063
A24R19	1810-0030		NETWORK:7 RESISTORS 1K OHM 5% 0.15W EA	28480	1810-0030
A24R20	1810-0063		RESISTIVE NETWORK:7 X 133 OHM 5% 2W EA	28480	1810-0063
A24R21	1810-0030		NETWORK:7 RESISTORS 1K OHM 5% 0.15W EA	28480	1810-0030
A24R22	1810-0063		RESISTIVE NETWORK:7 X 133 OHM 5% 2W EA	28480	1810-0063
A24R23	1810-0030		NETWORK:7 RESISTORS 1K OHM 5% 0.15W EA	28480	1810-0030
A24R24	1810-0063		RESISTIVE NETWORK:7 X 133 OHM 5% 2W EA	28480	1810-0063
A24R25	1810-0030		NETWORK:7 RESISTORS 1K OHM 5% 0.15W EA	28480	1810-0030
A24R26	1810-0063		RESISTIVE NETWORK:7 X 133 OHM 5% 2W EA	28480	1810-0063
A24R27	0757-0416		R:FXD MET FLM 511 OHM 1% 1/8W	28480	0757-0416
A24R28	0698-7236		R:FXD FLM 1K OHM 2% 1/8W	28480	0698-7236
A24R29	0698-7229		R:FXD FLM 511 OHM 2% 1/8W	28480	0698-7229
A24R30	0698-3441	1	R:FXD MET FLM 215 OHM 1% 1/8W	28480	0698-3441
A24R31	0757-0416		R:FXD MET FLM 511 OHM 1% 1/8W	28480	0757-0416
A24R32	0757-0280		R:FXD MET FLM 1K OHM 1% 1/8W	28480	0757-0280
A24R33	0698-7236		R:FXD FLM 1K OHM 2% 1/8W	28480	0698-7236
A24S1 THRU A24S38	3101-1531	38	SWITCH:REED	28480	3101-1531
A24S39	3101-0973	2	SWITCH:SLIDE DPDT 0.5A 125V AC/DC	79727	G126-0018
A24S40	3101-0973		SWITCH:SLIDE DPDT 0.5A 125V AC/DC	79727	G126-0018
A24U1	1820-0141	17	IC:TTL QUAD 2-INPT AND GATE	04713	MC3001P
A24U2	1820-0485	4	IC:CTL HEX LEVEL RESTORER	07263	U6B981649X
A24U3	1820-0371	4	IC:TTL HS TRIPLE 3-INPT NAND GATE	01295	SN74H10N
A24U4	1820-0371		IC:TTL HS TRIPLE 3-INPT NAND GATE	01295	SN74H10N
A24U5	1820-0141		IC:TTL QUAD 2-INPT AND GATE	04713	MC3001P
A24U6	1820-0301	10	IC:TTL QUAD BI-STABLE D-LATCH	01295	SN7475N
A24U7	1820-0377	1	IC:TTL HS DUAL 2-WIDE 2-INPT	01295	SN74H50N
A24U8	1820-0385	1	IC:TTL HS 4 W-3-2-2-3 INPT AND/OR EXP.	01295	SN74H62N
A24U9	1820-0205	13	IC:TTL QUAD 2-INPT OR GATE	28480	1820-0205
A24U10	1820-0370	6	IC:TTL HS QUAD 2-INPT NAND GATE	01295	SN74H00N
A24U11	1820-0141		IC:TTL QUAD 2-INPT AND GATE	04713	MC3001P
A24U12	1820-0485		IC:CTL HEX LEVEL RESTORER	07263	U6B981649X
A24U13	1820-0370		IC:TTL HS QUAD 2-INPT NAND GATE	01295	SN74H00N
A24U14	1820-0141		IC:TTL QUAD 2-INPT AND GATE	04713	MC3001P
A24U15	1820-0485		IC:CTL HEX LEVEL RESTORER	07263	U6B981649X
A24U16	1820-0186	10	IC:CTL DUAL 2-INPT AND GATE	07263	U6A985649X
A24U17	1820-0668	2	IC:TTL HEX BUFFER/DRIVER W/OPEN COLL.	01295	SN7407N
A24U18	1820-0485		IC:CTL HEX LEVEL RESTORER	07263	U6B981649X
A24U19(NOTE 1)	1820-0451	6	IC:TTL DUAL J-K F/F	04713	MC3062P
A24U20(NOTE 1)	1820-0451		IC:TTL DUAL J-K F/F	04713	MC3062P
A24U21(NOTE 1)	1820-0451		IC:TTL DUAL J-K F/F	04713	MC3062P
A24U22(NOTE 1)	1820-0451		IC:TTL DUAL J-K F/F	04713	MC3062P
A24U23	1820-0512	1	IC:TTL DUAL D F/F	01295	SN74H74N
A24U24	1820-0301		IC:TTL QUAD BI-STABLE D-LATCH	01295	SN7475N
A24U25	1820-0375	5	IC:TTL HS 8-INPT NAND GATE	01295	SN74H30N
A24U26	1820-0370		IC:TTL HS QUAD 2-INPT NAND GATE	01295	SN74H00N
A24U27	1820-0370		IC:TTL HS QUAD 2-INPT NAND GATE	01295	SN74H00N
A24U28	1820-0301		IC:TTL QUAD BI-STABLE D-LATCH	01295	SN7475N
A24U29	1820-0301		IC:TTL QUAD BI-STABLE D-LATCH	01295	SN7475N
A24U30	1820-0375		IC:TTL HS 8-INPT NAND GATE	01295	SN74H30N
A24U31	1820-0301		IC:TTL QUAD BI-STABLE D-LATCH	01295	SN7475N
A24U32	1820-0375		IC:TTL HS 8-INPT NAND GATE	01295	SN74H30N
A24U33	1820-0301		IC:TTL QUAD BI-STABLE D-LATCH	01295	SN7475N
A24U34	1820-0205		IC:TTL QUAD 2-INPT OR GATE	28480	1820-0205
A24U35	1820-0424	4	IC:TTL HS HEX INVERTER	04713	SN74H04N
A24U36	1820-0424		IC:TTL HS HEX INVERTER	04713	SN74H04N
A24U37	1820-0205		IC:TTL QUAD 2-INPT OR GATE	28480	1820-0205
A24U38	1820-0371		IC:TTL HS TRIPLE 3-INPT NAND GATE	01295	SN74H10N
A24U39	1820-0372	2	IC:TTL TRIPLE 3-INPT AND GATE	28480	1820-0372
A24U40	1820-0370		IC:TTL HS QUAD 2-INPT NAND GATE	01295	SN74H00N
A24U41	1820-0372		IC:TTL TRIPLE 3-INPT AND GATE	28480	1820-0372
A24U42	1820-0370		IC:TTL HS QUAD 2-INPT NAND GATE	01295	SN74H00N
A24U43	1820-0371		IC:TTL HS TRIPLE 3-INPT NAND GATE	01295	SN74H10N
A24U44	1820-0141		IC:TTL QUAD 2-INPT AND GATE	04713	MC3001P
A24U45	1820-0141		IC:TTL QUAD 2-INPT AND GATE	04713	MC3001P
A24U46	1820-0424		IC:TTL HS HEX INVERTER	04713	SN74H04N
A24U47	1820-0141		IC:TTL QUAD 2-INPT AND GATE	04713	MC3001P
A24U48	1820-0141		IC:TTL QUAD 2-INPT AND GATE	04713	MC3001P
A24U49	1820-0205		IC:TTL QUAD 2-INPT OR GATE	28480	1820-0205
A24U50	1820-0769	11	IC:TTL DIGITAL	28480	1820-0769
A24U51	1820-0769		IC:TTL DIGITAL	28480	1820-0769
A24U52	1820-0769		IC:TTL DIGITAL	28480	1820-0769
A24U53	1820-0617	4	IC:TTL QUAD 2-INPT EXCL. NOR GATE	04713	MC3022P
A24U54	1820-0769		IC:TTL DIGITAL	28480	1820-0769

NOTES 1. Part no. 1820 0695 used on some cards, the two parts are interchangeable.

Table 2-21. A24 Operator Panel Card, Replaceable Parts (Continued)

Reference Designation	HP Part Number	Qty	Description	Mfr Code	Mfr Part Number
A24U55	1820-1018		IC:TTL HS 8-INPT NAND GATE	01295	SN74H30H
A24U56	1820-0769		IC:TTL DIGITAL	28480	1820-0769
A24U57	1820-0617		IC:TTL QUAD 2-INPT EXCL. NOR GATE	04713	MC3022P
A24U58	1820-0769		IC:TTL DIGITAL	28480	1820-0769
A24U59	1820-0617		IC:TTL QUAD 2-INPT EXCL. NOR GATE	04713	MC3022P
A24U60	1820-0769		IC:TTL DIGITAL	28480	1820-0769
A24U61	1820-0617		IC:TTL QUAD 2-INPT EXCL. NOR GATE	04713	MC3022P
A24U62	1820-0375		IC:TTL HS 8-INPT NAND GATE	01295	SN74H30N
A24U63	1820-0769		IC:TTL DIGITAL	28480	1820-0769
A24U64	1820-0769		IC:TTL DIGITAL	28480	1820-0769
A24U65	1820-0769		IC:TTL DIGITAL	28480	1820-0769
A24U66	1820-0769		IC:TTL DIGITAL	28480	1820-0769
A24U67	1820-0140	1	IC:TTL DUAL 4-INPT AND BUFFER	04713	MC3026P
A24U68	1820-0186		IC:CTL DUAL 2-INPT AND GATE	07263	U6A985649X
A24U69(NOTE 1)	1820-0451		IC:TTL DUAL J-K F/F	04713	MC3062P
A24U70	1820-0141		IC:TTL QUAD 2-INPT AND GATE	04713	MC3001P
A24U71	1820-0205		IC:TTL QUAD 2-INPT OR GATE	28480	1820-0205
A24U72	1820-0186		IC:CTL DUAL 2-INPT AND GATE	07263	U6A985649X
A24U73	1820-0186		IC:CTL DUAL 2-INPT AND GATE	07263	U6A985649X
A24U74	1820-0141		IC:TTL QUAD 2-INPT AND GATE	04713	MC3001P
A24U75	1820-0205		IC:TTL QUAD 2-INPT OR GATE	28480	1820-0205
A24U76	1820-0186		IC:CTL DUAL 2-INPT AND GATE	07263	U6A985649X
A24U77	1820-0186		IC:CTL DUAL 2-INPT AND GATE	07263	U6A985649X
A24U78	1820-0141		IC:TTL QUAD 2-INPT AND GATE	04713	MC3001P
A24U79	1820-0205		IC:TTL QUAD 2-INPT OR GATE	28480	1820-0205
A24U80	1820-0186		IC:CTL DUAL 2-INPT AND GATE	07263	U6A985649X
A24U81	1820-0186		IC:CTL DUAL 2-INPT AND GATE	07263	U6A985649X
A24U82	1820-0141		IC:TTL QUAD 2-INPT AND GATE	04713	MC3001P
A24U83	1820-0205		IC:TTL QUAD 2-INPT OR GATE	28480	1820-0205
A24U84	1820-0186		IC:CTL DUAL 2-INPT AND GATE	07263	U6A985649X
A24U85	1820-0186		IC:CTL DUAL 2-INPT AND GATE	07263	U6A985649X
A24U86	1820-0141		IC:TTL QUAD 2-INPT AND GATE	04713	MC3001P
A24U87	1820-0424		IC:TTL HS HEX INVERTER	04713	SN74H04N
A24U88	1820-0205		IC:TTL QUAD 2-INPT OR GATE	28480	1820-0205
A24U89	1820-0668		IC:TTL HEX BUFFER/DRIVER W/OPEN COLL.	01295	SN7407N
A24U90	1820-0437	4	IC:TTL QUAD D F/F	04713	MC4015P
A24U91	1820-0301		IC:TTL QUAD BI-STABLE D-LATCH	01295	SN7475N
A24U92	1820-0141		IC:TTL QUAD 2-INPT AND GATE	04713	MC3001P
A24U93	1820-0205		IC:TTL QUAD 2-INPT OR GATE	28480	1820-0205
A24U94	1820-0437		IC:TTL QUAD D F/F	04713	MC4015P
A24U95	1820-0301		IC:TTL QUAD BI-STABLE D-LATCH	01295	SN7475N
A24U96	1820-0141		IC:TTL QUAD 2-INPT AND GATE	04713	MC3001P
A24U97	1820-0205		IC:TTL QUAD 2-INPT OR GATE	28480	1820-0205
A24U98	1820-0437		IC:TTL QUAD D F/F	04713	MC4015P
A24U99	1820-0301		IC:TTL QUAD BI-STABLE D-LATCH	01295	SN7475N
A24U100	1820-0141		IC:TTL QUAD 2-INPT AND GATE	04713	MC3001P
A24U101	1820-0205		IC:TTL QUAD 2-INPT OR GATE	28480	1820-0205
A24U102	1820-0437		IC:TTL QUAD D F/F	04713	MC4015P
A24U103	1820-0301		IC:TTL QUAD BI-STABLE D-LATCH	01295	SN7475N
A24U104	1820-0141		IC:TTL QUAD 2-INPT AND GATE	04713	MC3001P
A24U105	1820-0205		IC:TTL QUAD 2-INPT OR GATE	28480	1820-0205
A24U107(NOTE 1)	1820-0451		IC:TTL DUAL J-K F/F	04713	MC3062P
A24W1	8159-0005	3	JUMPER WIRE	28480	8159-0005
A24W2	8159-0005		JUMPER WIRE	28480	8159-0005
A24W3	8159-0005		JUMPER WIRE	28480	8159-0005

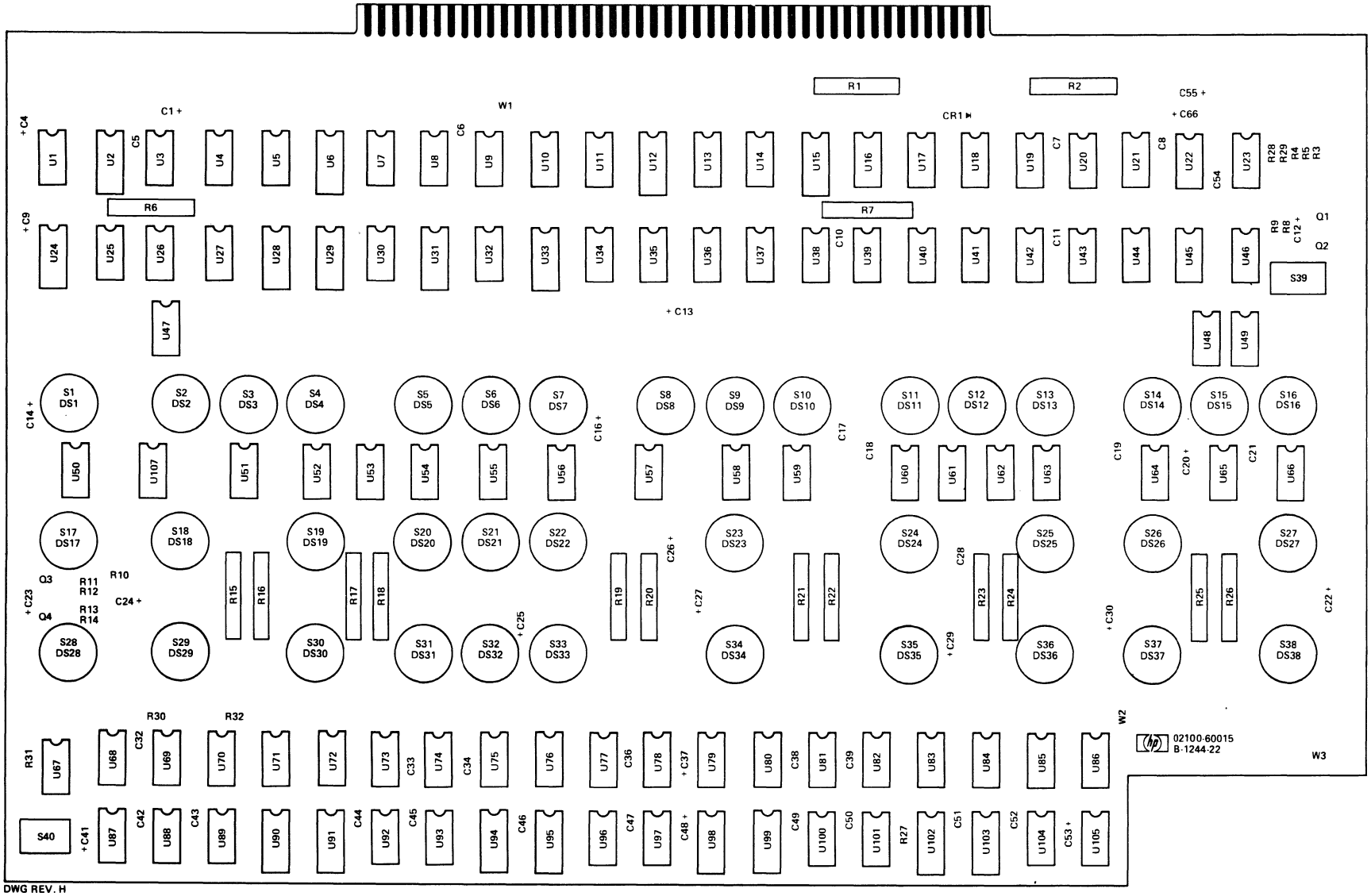

DWG REV. H

NOTE: THIS DIAGRAM ALSO APPLIES TO CARD REV. A-1123-22 AND A-1244-22.

Figure 2-21. Operator Panel Card, Parts Location Diagram

Table 2-22. A24 Controller Panel Card (Option 001), Replaceable Parts

Reference Designation	HP Part Number	Qty	Description	Mfr Code	Mfr Part Number
A24	C2100-60017	1	CONTROLLER PANEL CARD	28480	02100-60017
A24C1	C180-0106	7	C:FXD ELECT 60 UF 20% 6VDCW	28480	0180-0106
A24C2	0180-0106		C:FXD ELECT 60 UF 20% 6VDCW	28480	0180-0106
A24C3	0180-0106		C:FXD ELECT 60 UF 20% 6VDCW	28480	0180-0106
A24C4	0160-2055	13	C:FXD CER 0.01 UF +80-20% 100VDCW	56289	C023F101F103ZS22-CDH
A24C5	0160-2055		C:FXD CER 0.01 UF +80-20% 100VDCW	56289	C023F101F103ZS22-CDH
A24C6	0160-2055		C:FXD CER 0.01 UF +80-20% 100VDCW	56289	C023F101F103ZS22-CDH
A24C7	0160-2055		C:FXD CER 0.01 UF +80-20% 100VDCW	56289	C023F101F103ZS22-CDH
A24C8	0160-2055		C:FXD CER 0.01 UF +80-20% 100VDCW	56289	C023F101F103ZS22-CDH
A24C9	0160-2055		C:FXD CER 0.01 UF +80-20% 100VDCW	56289	C023F101F103ZS22-CDH
A24C10	0160-2055		C:FXD CER 0.01 UF +80-20% 100VDCW	56289	C023F101F103ZS22-CDH
A24C11	0160-2055		C:FXD CER 0.01 UF +80-20% 100VDCW	56289	C023F101F103ZS22-CDH
A24C12	0160-2055		C:FXD CER 0.01 UF +80-20% 100VDCW	56289	C023F101F103ZS22-CDH
A24C13	0160-2055		C:FXD CER 0.01 UF +80-20% 100VDCW	56289	C023F101F103ZS22-CDH
A24C14	0160-2055		C:FXD CER 0.01 UF +80-20% 100VDCW	56289	C023F101F103ZS22-CDH
A24C15	0180-0106		C:FXD ELECT 60 UF 20% 6VDCW	28480	0180-0106
A24C16	0180-0106		C:FXD ELECT 60 UF 20% 6VDCW	28480	0180-0106
A24C17	0180-0106		C:FXD ELECT 60 UF 20% 6VDCW	28480	0180-0106
A24C18	0180-0106		C:FXD ELECT 60 UF 20% 6VDCW	28480	0180-0106
A24C19	0160-2055		C:FXD CER 0.01 UF +80-20% 100VDCW	56289	C023F101F103ZS22-CDH
A24C20	0180-0197	1	C:FXD ELECT 2.2 UF 10% 20VDCW	56289	150D225X9020A2-DYS
A24C21	0160-2055		C:FXD CER 0.01 UF +80-20% 100VDCW	56289	C023F101F103ZS22-CDH
A24DS1	2140-0364	5	LAMP:INCANDESCENT	28480	2140-0364
A24DS2	2140-0364		LAMP:INCANDESCENT	28480	2140-0364
A24DS3	2140-0364		LAMP:INCANDESCENT	28480	2140-0364
A24DS4	2140-0364		LAMP:INCANDESCENT	28480	2140-0364
A24DS5	2140-0364		LAMP:INCANDESCENT	28480	2140-0364
A24Q1	1854-0477	2	TSTR:SI NPN	80131	2N2222A
A24Q2	1854-0477		TSTR:SI NPN	80131	2N2222A
A24R1	0757-0280	2	R:FXD MET FLM 1K OHM 1% 1/8W	28480	0757-0280
A24R2	0698-0084	1	R:FXD MET FLM 2.15K OHM 1% 1/8W	28480	0698-0084
A24R3	0757-0442	1	R:FXD MET FLM 10.0K OHM 1% 1/8W	28480	0757-0442
A24R4	0757-0416	1	R:FXD MET FLM 511 OHM 1% 1/8W	28480	0757-0416
A24R5	0757-0280		R:FXD MET FLM 1K OHM 1% 1/8W	28480	0757-0280
A24R6	1810-0030	3	NETWORK:7 RESISTORS 1K OHM 5% 0.15W EA	28480	1810-0030
A24R7	1810-0030		NETWORK:7 RESISTORS 1K OHM 5% 0.15W EA	28480	1810-0030
A24R8	1810-0030		NETWORK:7 RESISTORS 1K OHM 5% 0.15W EA	28480	1810-0030
A24R9	1810-0063	1	RESISTIVE NETWORK:7 X 133 OHM 5% 2W EA	28480	1810-0063
A24S1	3101-1531	5	SWITCH:REED	28480	3101-1531
A24S2	3101-1531		SWITCH:REED	28480	3101-1531
A24S3	3101-1531		SWITCH:REED	28480	3101-1531
A24S4	3101-1531		SWITCH:REED	28480	3101-1531
A24S5	3101-1531		SWITCH:REED	28480	3101-1531
A24U11	1820-0068	1	IC:TTL TRIPLE 3-INPUT POS NAND GATE	12040	SN7410N
A24U12	1820-0301	1	IC:TTL QUAD BI-STABLE D-LATCH	01295	SN7475N
A24U13	1820-0069	1	IC:TTL DUAL 4-INPT POS NAND GATE	01295	SN7420N
A24U19	1820-0451	2	IC:TTL DUAL J-K F/F	04713	MC3062P
A24U21	1820-0424	1	IC:TTL HS HEX INVERTER	04713	SN74H04N
A24U22	1820-0370	3	IC:TTL HS QUAD 2-INPT NAND GATE	01295	SN74H00N
A24U23	1820-0370		IC:TTL HS QUAD 2-INPT NAND GATE	01295	SN74H00N
A24U24	1820-0256	2	IC:DTL QUAD 2-INPUT POWER GATE	04713	MC858P
A24U31	1820-0141	2	IC:TTL QUAD 2-INPT AND GATE	04713	MC3001P
A24U32	1820-0370		IC:TTL HS QUAD 2-INPT NAND GATE	01295	SN74H00N
A24U33	1820-0485	2	IC:CTL HEX LEVEL RESTORER	07263	U68981649X
A24U34	1820-0485		IC:CTL HEX LEVEL RESTORER	07263	U68981649X
A24U35	1820-0186	7	IC:CTL DUAL 2-INPT AND GATE	07263	U6A985649X
A24U36	1820-0186		IC:CTL DUAL 2-INPT AND GATE	07263	U6A985649X
A24U37	1820-0186		IC:CTL DUAL 2-INPT AND GATE	07263	U6A985649X
A24U38	1820-0186		IC:CTL DUAL 2-INPT AND GATE	07263	U6A985649X
A24U39	1820-0186		IC:CTL DUAL 2-INPT AND GATE	07263	U6A985649X
A24U40	1820-0186		IC:CTL DUAL 2-INPT AND GATE	07263	U6A985649X
A24U41	1820-0186		IC:CTL DUAL 2-INPT AND GATE	07263	U6A985649X
A24U42	1820-0451		IC:TTL DUAL J-K F/F	04713	MC3062P
A24U43	1820-0141		IC:TTL QUAD 2-INPT AND GATE	04713	MC3001P
A24U44	1820-0256		IC:DTL QUAD 2-INPUT POWER GATE	04713	MC858P
A24W1	8159-0005	5	JUMPER WIRE	28480	8159-0005
A24W2	8159-0005		JUMPER WIRE	28480	8159-0005
A24W3	8159-0005		JUMPER WIRE	28480	8159-0005
A24W4	8159-0005		JUMPER WIRE	28480	8159-0005
A24W5	8159-0005		JUMPER WIRE	28480	8159-0005

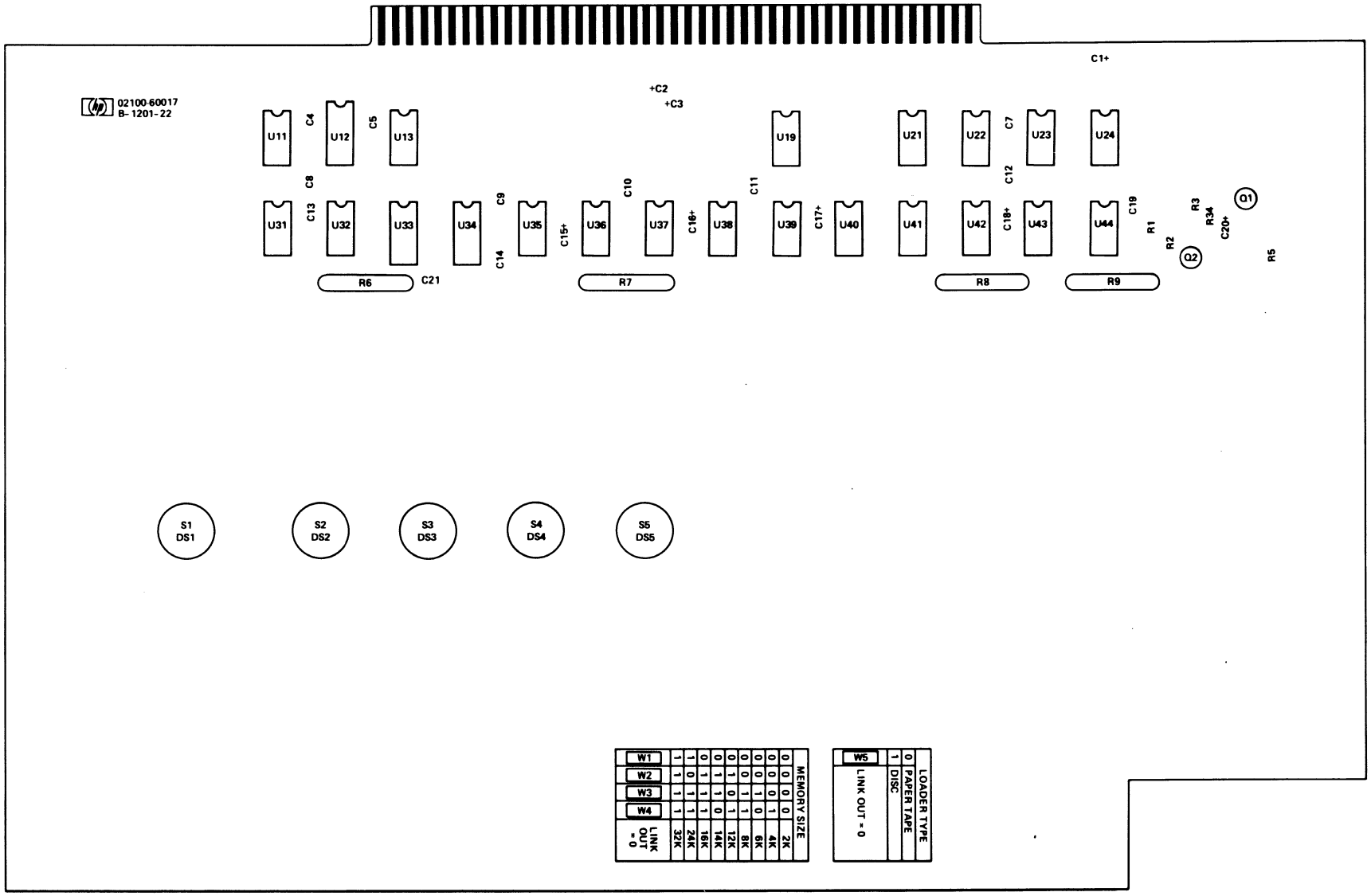

DWG REV. B

NOTE: THIS DIAGRAM ALSO APPLIES TO CARD REV. A-1128-22.

Figure 2-22. Controller Panel Card (Option 001), Parts Location Diagram

Table 2-23. Plenum Chamber Assembly, Replaceable Parts

FIG & INDEX NO.	HP PART NO.	DESCRIPTION	MFR CODE	MFR PART NO.	UNITS PER ASSY
2-23-	02100-60041	PLENUM CHAMBER ASSEMBLY (A26) (49, figure 2-1)	28480	02100-60041	1
1	02100-00021	* Filter, rear	28480	02100-00021	1
2	1251-0013	** Fastener, Spring Tension, Trim	78947	152239	4
		(Attaching Parts)			
3	2190-0006	** Washer, Lock, split, No. 6	00000	OBD	4
4	0570-1029	** Stud, threaded, 1/4 in. long	00000	OBD	4
		– – – x – – –			
5	0360-1317	* Block, Terminal	76530	354-11-10-001	1
		(Attaching Parts)			
	2360-0203	* Screw, Machine, ph, No. 6-32, 5/8 in.	00000	OBD	2
	2190-0851	* Washer, Lock, Split, No. 6	00000	OBD	2
		– – – x – – –			
6	02100-00124	* Cover, Access, bottom	28480	02100-00124	1
		(Attaching Parts)			
	2360-0192	* Screw, Machine, ph, No. 6-32, 1/4 in.	00000	OBD	2
		– – – x – – –			
7	0360-0015	* Strip, Terminal	76530	332-14-03-011	1
		(Attaching Parts)			
	2360-0197	* Screw, Machine, ph, No. 6-32, 3/8 in.	00000	OBD	1
	2190-0851	* Washer, Lock, split, No. 6	00000	OBD	1
	2420-0002	* Nut, Plain, Hexagon, No. 6-32	00000	OBD	1
		– – – x – – –			
8	3160-0224	* Fan, Tubeaxial (B1, B2)	28480	3160-0224	2
		(Attaching Parts)			
9*	2360-0205	* Screw, Machine, ph, No. 6-32, 3/4 in.	00000	OBD	4
10*	2190-0851	* Washer, Lock, split, No. 6	00000	OBD	4
11*	2420-0002	* Nut, Plain, Hexagon, No. 6-32	00000	OBD	4
		– – – x – – –			
12	5000-8015	* Guard, Fan	28480	5000-8015	2
13	0362-0143	* Terminal Lug, No. 8	00000	OBD	3
14	8120-1851	* Cable, 10 feet long	28480	8120-1851	1
15	1251-0313	* Connector, Plug, AC, 3 pin (P1) (shown in figure 2-23)	00000	OBD	1
	1251-2207	* Connector, Plug, AC, 3 pin (P1) (used for option 015)	00000	OBD	1
16	0100-0434	* Collar, Cable, Tension	49367	DB-10	1
		(Attaching Parts)			
17	0100-0433	* Nut, Lock, conduit	22421	141	1
18	0100-0432	* Washer, Reducing, 3/4 in. ID, 1-5/8 in. OD	74201	1365	2
		– – – x – – –			
19	2110-0249	* Fuse, 12A, 250V (F1)	75915	314012	1
	2110-0451	* Fuse, 6A, 250V (F1) (used for Option 015)	75915	314006	1
20	2110-0002	* Fuse, 2A, 250V (F2)	75915	312002	1
	2110-0001	* Fuse, 1A, 250V (F2) (used for Option 015)	75915	312001	1
21	1400-0084	* Fuseholder (XF1, XF2)	75915	342014	2
		(Attaching Parts)			
22	2950-0038	* Nut, Plain, Hexagon, 1/2-24	00000	OBD	1
23	2190-0068	* Washer, Lock, int-tooth, 1/2 in. ID	00000	OBD	1
24	1400-0090	* Gasket, Neoprene, 5/8 in. OD	00000	OBD	2
		– – – x – – –			
25	0150-0096	* Capacitor, Fxd, Cer. 0.05 uF, +80 -20%, 100 VDCW (C2)	91418	TA	1
26	1250-0118	* Connector, Receptacle (J1)	24931	28JR128-1	
		(Attaching Parts)			
27	2950-0001	* Nut, Plain, Hexagon, 3/8-32	00000	OBD	1
28	2190-0016	* Washer, Lock, int-tooth, 3/8 in. ID	00000	OBD	1
		– – – x – – –			
29	0360-0024	* Terminal, Lug, 1-5/8 in. long	79963	508-H380	1
	02100-60050	* Test Point Board Assembly	28480	02100-60050	1
		(Attaching Parts)			
30	0360-1149	* Jack, Tip (J2 thru J9)	00866	1600B	7
		– – – x – – –			
31	0698-0089	** Resistor, Fxd, Met Flm, 1.780 ohms, 1%, 1/2W (R7)	28480	0698-0089	1
32	0757-0818	** Resistor, Fxd, Met Flm, 825 ohms, 1%, 1/2W (R1, R6)	28480	0757-0818	2
33	0757-1000	** Resistor, Fxd, Met Flm, 51.1 ohms, 1%, 1/2W (R3, R4)	28480	0757-1000	2
34	0757-1092	** Resistor, Fxd, Met Flm, 287 ohms, 1%, 1/2W (R2, R5)	28480	0757-1092	2
35	02100-80050	** Printed-Circuit Board	28480	02100-80050	1
36	02100-00126	* Panel Rear	28480	02100-00126	1

*Items 9, 10, and 11 may be replaced by a tapping screw, no. 8-32, 3/4 in.

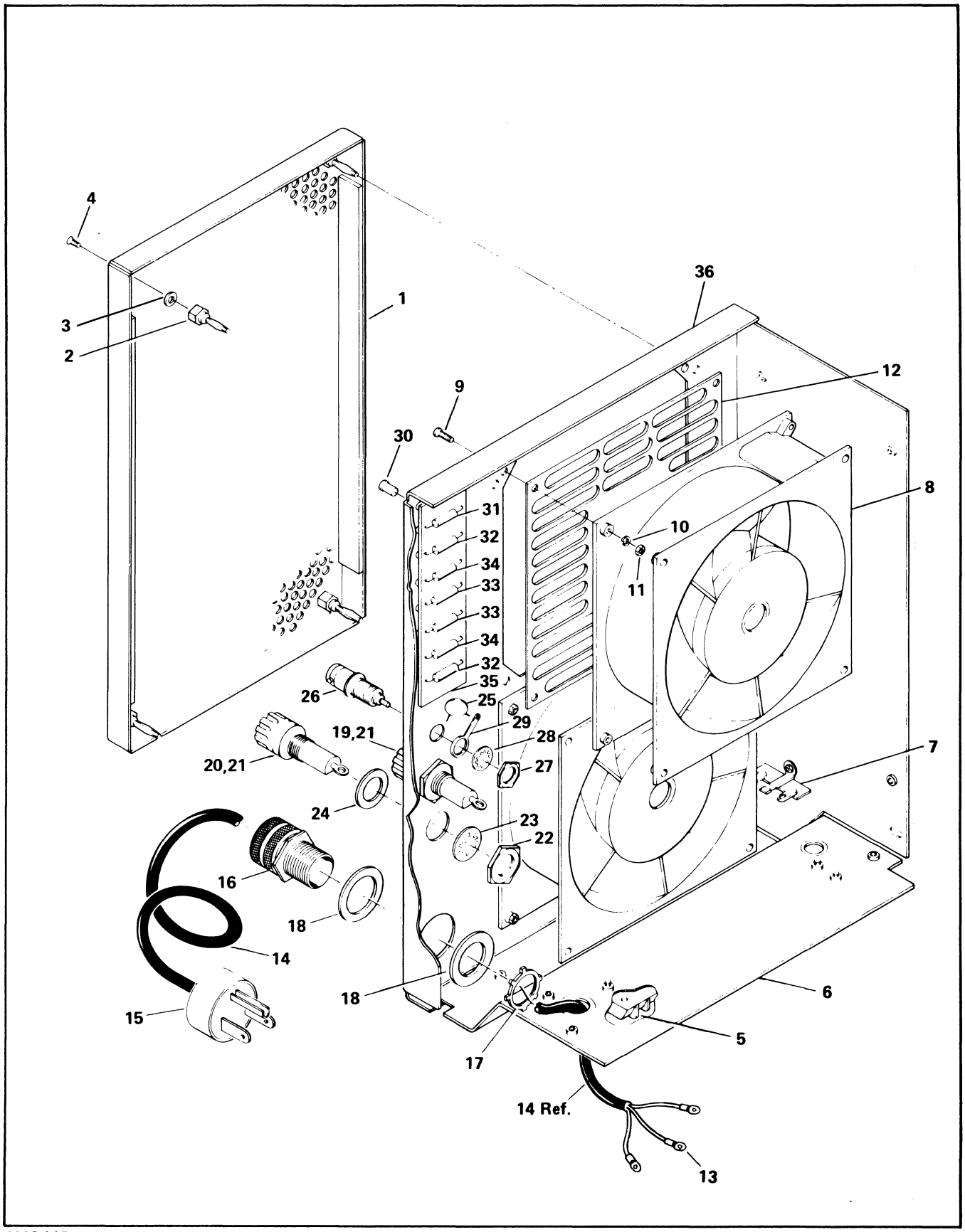

2135-10B

Figure 2-23. Plenum Chamber Assembly, Exploded View

Table 2-24. Power Switch Assembly, Replaceable Parts

FIG & INDEX NO.	HP PART NO.	DESCRIPTION	MFR CODE	MFR PART NO.	UNITS PER ASSY
2-24-	02100-60051	POWER SWITCH ASSEMBLY (74, figure 2-1)	28480	02100-60051	1
1	2360-0193	* Screw, Machine, ph, No. 6-32, 1/4 in.	00000	OBD	2
2	2190-0851	* Washer, Lock, split, No. 6	00000	OBD	2
3	3050-0010	* Washer, Flat, No. 6	00000	OBD	2
4	02100-00086	* Cover, Top	28480	02100-00086	1
		(Attaching Parts)			
5	2360-0193	* Screw, Machine, ph, No. 6-32, 1/4 in.	00000	OBD	2
6	2190-0851	* Washer, Lock, split, No. 6	00000	OBD	2
		---x---			
7	02100-00049	* Cover, bottom	28480	02100-00049	1
8	1390-0224	* Lock and Key	81741	4188	1
		(Attaching Parts)			
9	No Number	* Nut, Plain, Hexagon (furnished with item 8)			1
10	No Number	* Washer, Flat (furnished with item 8)			1
		---x---			
11	02100-00044	* Panel, Switch	28480	02100-00044	1
12	02100-00051	* Bracket, Mounting, Lock	28480	02100-00051	1
13	2950-0001	* Nut, Plain, Hexagon, 3/8-32	00000	OBD	1
14	2190-0015	* Washer, Lock, int-tooth	00000	OBD	2
15	02100-00085	* Bracket, double angle	28480	02100-00085	1
16	3101-1657	* Microswitch (S1B)	14268	22-102000	1
		(Attaching Parts)			
17	2200-0151	* Screw, Machine, ph, No. 4-40, 3/4 in.	00000	OBD	2
18	3050-0229	* Washer, Flat, No. 4	00000	OBD	4
19	2190-0003	* Washer, Lock, split, No. 4	00000	OBD	2
20	2260-0002	* Nut, Plain, Hexagon, No. 4-40	00000	OBD	2
		---x---			
21	02100-20053	* Cam	28480	02100-20053	1
		(Attaching Parts)			
22	3030-0243	* Setscrew, Socket Head, No. 6-32, 5/16 in.	00000	OBD	2
		---x---			
23	3100-3008	* Switch, Rotary (S1A)	76854	3P3P	1
		(Attaching Parts)			
24	2260-0002	* Nut, Plain, Hexagon, No. 4-40	00000	OBD	2
25	2190-0003	* Washer, Lock, split, No. 4	00000	OBD	2
26	0360-0033	* Spacer, Sleeve, 3/32 in. ID, 1/2 in. long	00000	OBD	2
		---x---			
27	02100-00168	* Plate, Mounting	28480	02100-00168	1

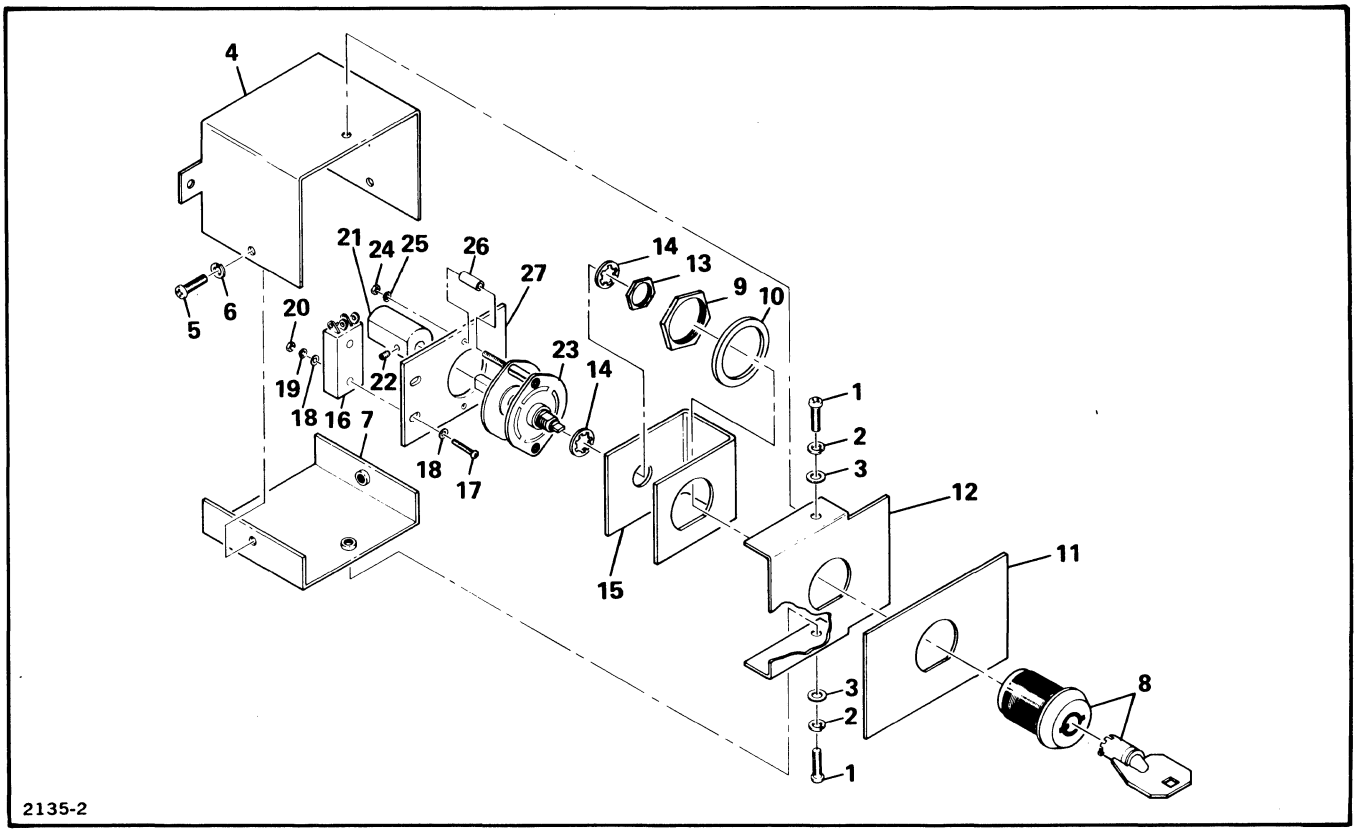

Figure 2-24. Power Switch Assembly, Exploded View

Table 2-25. Card Cage Assembly, Replaceable Parts

FIG & INDEX NO.	HP PART NO.	DESCRIPTION	MFR CODE	MFR PART NO.	UNITS PER ASSY
2-25-	No Number	CARD CAGE ASSEMBLY (78, figure 2-1) (Cannot be ordered as a complete unit)			1
1	02100-20009	* Bar, front panel support	28480	02100-20009	1
		(Attaching Parts)			
2	2360-0197	* Screw, Machine, ph, No. 6-32, 3/8 in.	00000	OBD	2
3	2190-0851	* Washer, Lock, split, No. 6	00000	OBD	2
		– – – x – – –			
4	02100-00005	* Bracket, Angle, Left	28480	02100-00005	1
		(Attaching Parts)			
5	2360-0196	* Screw, Machine, flh, No. 6-32, 3/8 in.	00000	OBD	2
6	2510-0107	* Screw, Machine, ph, No. 8-32, 1/2 in.	00000	OBD	1
7	2190-0076	* Washer, Lock, split, No. 8	00000	OBD	1
8	2580-0004	* Nut, Plain, Hexagon, No. 8-32	00000	OBD	1
		– – – x – – –			
9	02100-00006	* Bracket, Angle, Right	28480	02100-00006	1
		(Attaching Parts)			
10	2360-0196	* Screw, Machine, flh, No. 6-32, 3/8 in.	00000	OBD	2
11	2510-0107	* Screw, Machine, ph, No. 8-32, 1/2 in.	00000	OBD	1
12	2190-0076	* Washer, Lock, split, No. 8	00000	OBD	1
13	2580-0004	* Nut, Plain, Hexagon, No. 8-32	00000	OBD	1
		– – – x – – –			
14	02100-20003	* Support, Printed-Circuit Card Guide	28480	02100-20003	1
15	5040-6005	* Guide, Printed-Circuit Card	28480	5040-6005	23
16	02100-20003	* Support, Printed-Circuit Card Guide	28480	02100-20003	1

Table 2-25. Card Cage Assembly, Replaceable Parts (Continued)

FIG & INDEX NO.	HP PART NO.	DESCRIPTION	MFR CODE	MFR PART NO.	UNITS PER ASSY
2-25- 17	02100-00007	* Plate, Mounting	28480	02100-00007	2
		(Attaching Parts)			
	2360-0197	* Screw, Machine, ph, No. 6-32, 3/8 in.	00000	OBD	1
	2190-0851	* Washer, Lock, split, No. 6	00000	OBD	1
	3050-0227	* Washer, Flat, No. 6	00000	OBD	1
		---x---			
18	02100-00003	* Bracket, Mounting	28480	02100-00003	1
		(Attaching Parts)			
19	2360-0197	* Screw, Machine, ph, No. 6-32, 3/8 in.	00000	OBD	1
20	2190-0851	* Washer, Lock, split, No. 6	00000	OBD	1
21	3050-0227	* Washer, Flat, No. 6	00000	OBD	1
22	2510-0107	* Screw, Machine, ph, No. 8-32, 1/2 in.	00000	OBD	2
23	3050-0139	* Washer, Flat, No. 8	00000	OBD	2
24	2190-0076	* Washer, Lock, split, No. 8	00000	OBD	2
25	2580-0004	* Nut, Plain, Hexagon, No. 8-32	00000	OBD	2
		---x---			
26	02100-00004	* Bracket, Angle	28480	02100-00004	1
		(Attaching Parts)			
27	2360-0197	* Screw, Machine, ph, No. 6-32, 3/8 in.	00000	OBD	1
28	2190-0851	* Washer, Lock, split, No. 6	00000	OBD	1
29	3050-0227	* Washer, Flat, No. 6	00000	OBD	1
30	2510-0107	* Screw, Machine, ph, No. 8-32, 1/2 in.	00000	OBD	2
31	3050-0139	* Washer, Flat, No. 8	00000	OBD	2
32	2190-0076	* Washer, Lock, split, No. 8	00000	OBD	2
33	2580-0004	* Nut, Plain, Hexagon, No. 8-32	00000	OBD	2
		---x---			
33A	7120-0576	* Label, Card Cage, CPU (first used on serial numbers prefixed 1304)	28480	7120-0576	1
34	02100-20003	* Support, Printed-Circuit Card Guide	28480	02100-20003	1
		(Attaching Parts)			
35	2360-0197	* Screw, Machine, ph, No. 6-32, 3/8 in.	00000	OBD	2
36	2190-0851	* Washer, Lock, split, No. 6	00000	OBD	2
		---x---			
37	5040-6005	* Guide, Printed-Circuit Card	28480	5040-6005	23
38	02100-20003	* Support, Printed-Circuit Card Guide	28480	02100-20003	1
		(Attaching Parts)			
39	2360-0197	* Screw, Machine, ph, No. 6-32, 3/8 in.	00000	OBD	2
40	2190-0851	* Washer, Lock, split, No. 6	00000	OBD	2
		---x---			
41	02100-20004	* Bar, Rear Support	28480	02100-20004	2
		(Attaching Parts)			
42	2360-0197	* Screw, Machine, ph, No. 6-32, 3/8 in.	00000	OBD	2
43	2190-0851	* Washer, Lock, split, No. 6	00000	OBD	2
		---x---			
44	02100-00009	* Plate, Rear Mounting	28480	02100-00009	1
		(Attaching Parts)			
	2360-0197	* Screw, Machine, ph, No. 6-32, 3/8 in.	00000	OBD	1
	2190-0851	* Washer, Lock, split, No. 6	00000	OBD	1
	3050-0227	* Washer, Flat, No. 6	00000	OBD	1
		---x---			
45	No Number	* Plenum Chamber Side Bracket (see figure 2-26)	28480	No Number	1
		(Attaching Parts)			
46	2360-0197	* Screw, Machine, ph, No. 6-32, 3/8 in.	00000	OBD	1
47	2190-0851	* Washer, Lock, split, No. 6	00000	OBD	1
48	3050-0227	* Washer, Flat, No. 6	00000	OBD	1
49	2510-0107	* Screw, Machine, ph, No. 8-32, 1/2 in.	00000	OBD	2
50	2190-0076	* Washer, Flat, No. 8	00000	OBD	2
51	3050-0139	* Washer, Lock, split, No. 8	00000	OBD	2
52	2580-0004	* Nut, Plain, Hexagon, No. 8-32	00000	OBD	2
		---x---			
52A	7120-0575	* Label, Card Cage, Memory (first used on serial numbers prefixed 1304)	28480	7120-0575	1
53	02100-20002	* Support, Printed-Circuit Card Guide	28480	02100-20002	1
54	5040-6005	* Guide, Printed-Circuit Card	28480	5040-6005	11
55	02100-20002	* Support, Printed-Circuit Card Guide	28480	02100-20002	1
56	No Number	* Connector Pin	00779	67628-2	AR
57	02100-60056	* Backplane Assembly	28480	02100-60056	1

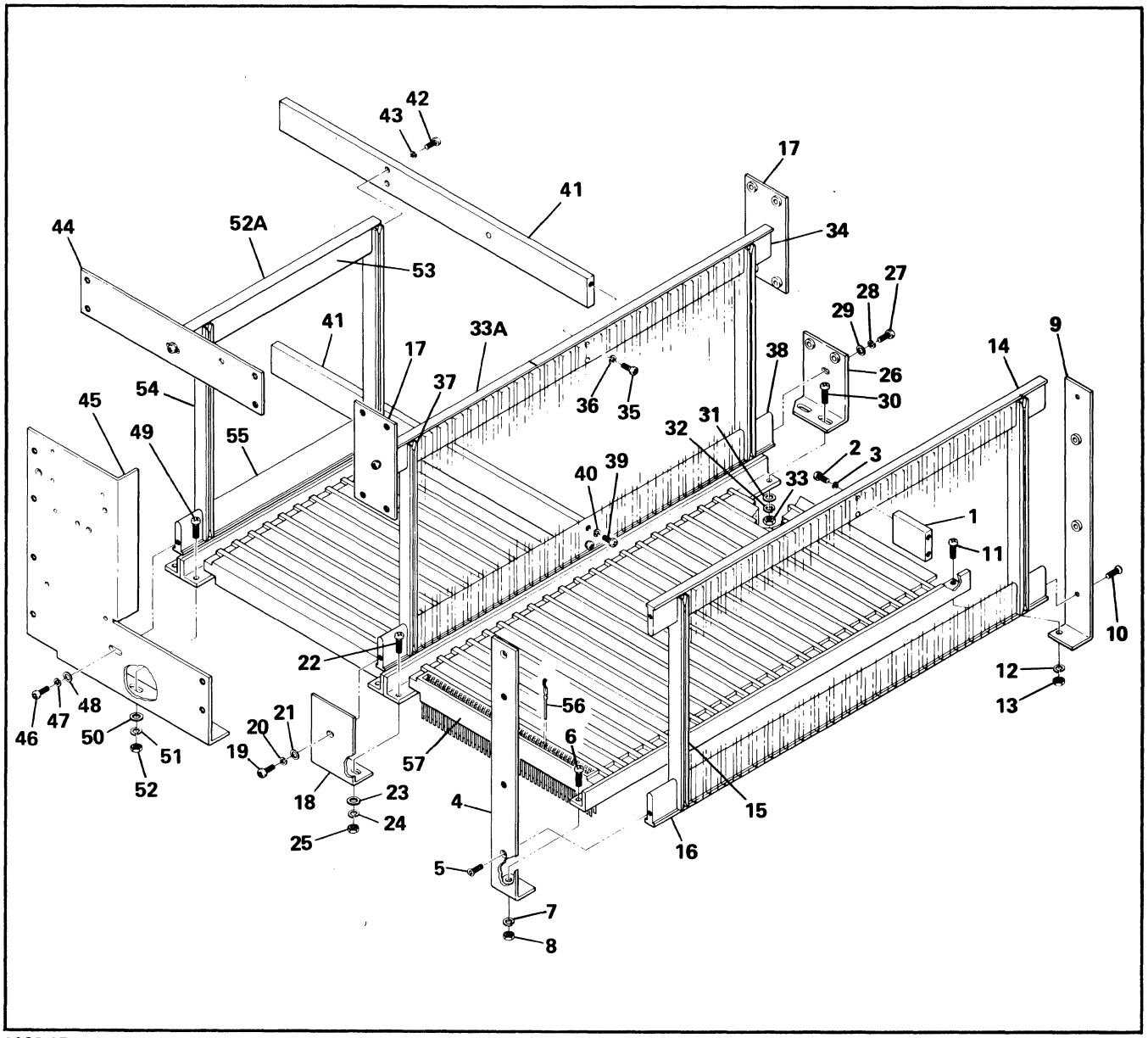

2135-17B

Figure 2-25. Card Cage Assembly, Exploded View

Table 2-26. Plenum Chamber Side Bracket, Replaceable Parts

FIG & INDEX NO.	HP PART NO.	DESCRIPTION	MFR CODE	MFR PART NO.	UNITS PER ASSY
2-26-	No Number	PLENUM CHAMBER SIDE BRACKET (45, figure 2-25)		No Number	1
1	0160-0904★	* Capacitor, Fxd, Cer, 0.05 uF, 20%, 1000 VDCW (C1)	56289	41C169A4-CDH	1
2	0698-3391	* Resistor, Fxd, Met Flm, 21.5 ohms, 10%, 1/2W (R1) (Used on serial numbers prefixed 1136 and 1140)	28480	0698-3391	1
	0698-3609	* Resistor, Fxd, Met Ox, 22 ohms, 5%, 2W (R1) (Used on serial numbers prefixed 1145 and 1146)	28480	0698-3609	1
	0811-2988	* Resistor, Fxd, WW, 22 ohms, 1%, 7W (R1) (Used on serial numbers prefixed 1147 and higher)	28480	0811-2988	1
3	9100-3317★	* Filter, Line (FL1)	05245	20B1	1
		(Attaching Parts)			
	2360-0197	* Screw, Machine, ph, No. 6-32, 3/8 in.	00000	OBD	2
	2190-0851	* Washer, Lock, split, No. 6	00000	OBD	2
	2420-0002	* Nut, Plain, Hexagon, No. 6-32	00000	OBD	2
		---x---			
4	2360-0197	* Screw, Machine, ph, No. 6-32, 3/8 in.	00000	OBD	1
5	2420-0001	* Nut, Assembled Washer, No. 6-32	00000	OBD	1
6	0160-4013	* Capacitor, Fxd, Paper, 1 uF, 440 VAC (C3)	28480	0160-4013	1
7	1400-0884	* Clamp, Capacitor	28480	1400-0884	1
		(Attaching Parts)			
8	2360-0197	* Screw, Machine, ph, No. 6-32, 3/8 in.	00000	OBD	1
9	2360-0196	* Screw, Machine, flh, No. 6-32, 3/8 in.	00000	OBD	1
10	3050-0227	* Washer, Lock, split, No. 6	00000	OBD	2
11	2190-0006	* Washer, Flat, No. 6	00000	OBD	2
12	2420-0002	* Nut, Plain, Hexagon, No. 6-32	00000	OBD	2
		---x---			
13	0360-0279	* Insulator, Standoff	17117	2304-54-1	2
		(Attaching Parts)			
	2200-0139	Screw, Machine, ph, No. 4-40, 1/4 in.	00000	OBD	2
	2190-0003	* Washer, Lock, split, No. 4	00000	OBD	1
		---x---			
14	02100-00010	* Bracket, Angle	28480	02100-00010	1

★Part no. 0160-0904 not used and item 3 part no. changed to part no. 9100-2947, Mfr Code 28480, Mfr Part No. 9100-2947 starting with serial numbers prefixed 1231.

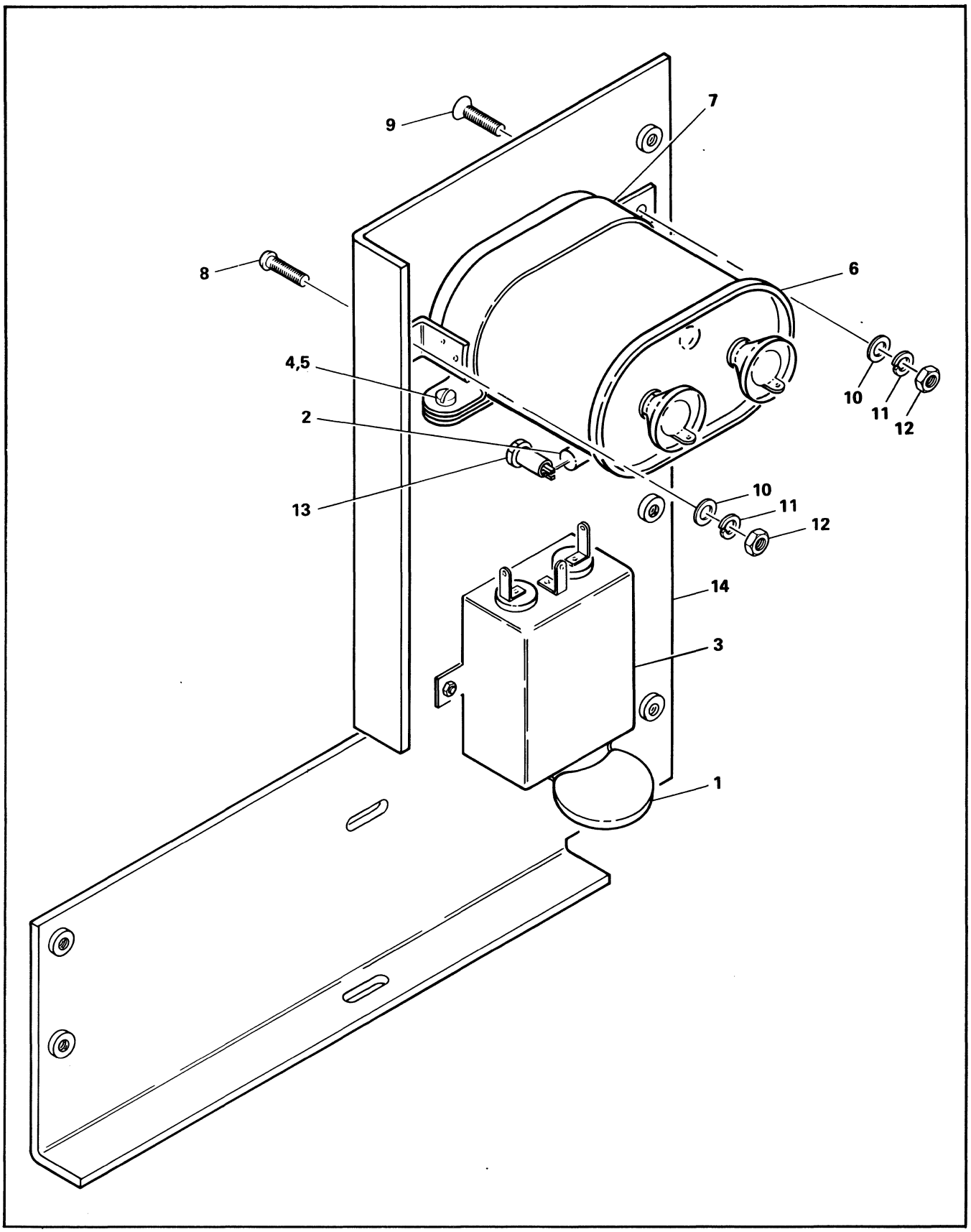

2135-9

Figure 2-26. Plenum Chamber Side Bracket, Exploded View

3-1. INTRODUCTION.

3-2. This section contains a complete listing of every replaceable part for the computer. The parts are segregated by the electrical or mechanical usage into two tables; tables 3-1 and 3-2, respectively. The listing of the parts in each table is in numerical order by part number, except in table 3-1 cable, connector, and card assemblies are listed at the end of the individual part listings.

3-3. Tables 3-1 and 3-2 are divided into segments to provide parts usage for the basic computer and for the various memory sizes, accessories, and options. The first segment of each table provides parts usage for the basic computer. For variations from the basic computer, add to, delete from, or change TQ column of the first segment as instructed in the DESCRIPTION column for the applicable segment.

3-4. The DESCRIPTION column and MFR CODE column of the tables use abbreviations and five digit codes, respectively. The abbreviations used in the DESCRIPTION column are explained in table 3-3, and the five digit codes used in the MFR CODE column are explained in table 3-4.

Table 3-1. Numerical Listing of Electrical Parts

HP PART NO.	DESCRIPTION	MFR CODE	MFR PART NO.	TQ
0140-0198	C: Fxd Mica 200 PF 5%	72136	RDM15F201J3C	1
0150-0096	Capacitor, Fxd, Cer, 0.05 uF, +80 -20%, 100 VDCW	91418	TA	1
0160-0904	Capacitor, Fxd, Cer, 0.05 uF, 20%, 1000 VDCW	56289	169A4-CDH	1
0160-2055	C: Fxd Cer 0.01 uF +80 -20%, 100 VDCW	56289	C023F101F103ZS22-CDH	235
0160-2207	C: Fxd Mica 300 PF 5%	28480	0160-2207	1
0180-0106	C: Fxd Elect 60 uF 20% 6 VDCW	28480	0180-0106	22
0180-0197	C: Fxd Elect 2.2 uF 10% 20 VDCW	56289	150D225X9020A2-DYS	65
0180-0291	C: Fxd Elect 1.0 uF 10% 35 VDCW	56289	150D105X9035A2-DYS	2
0360-1149	Jack, Tip	00866	1600B	7
0410-0432	Crystal: Quartz	28480	0410-0432	1
0683-1015	R: Fxd Comp 100 ohms 5% 1/4W	01121	CB1015	4
0683-1025	R: Fxd Comp 1000 ohms 5% 1/4W	01121	CB1025	6
0683-1525	R: Fxd Comp 1500 ohms 5% 1/4W	01121	CB1525	1
0683-1825	R: Fxd Comp 1800 ohms 5% 1/4W	01121	CB1825	3
0683-2215	R: Fxd Comp 220 ohms 5% 1/4W	28480	0683-2215	32
0683-3915	R: Fxd Comp 390 ohms 5% 1/4W	01121	CB3915	1
0683-4715	R: Fxd Comp 470 ohms 5% 1/4W	01121	CB4715	5
0698-0082	R: Fxd Met Flm 464 ohms 1% 1/8W	28480	0698-0082	3
0698-0089	Resistor, Fxd, Met Flm, 1.780 ohms, 1%, 1/2W	28480	0698-0089	1
0698-3132	R: Fxd Flm 261 ohms 1% 1/8W	28480	0698-3132	4
0698-3391★	Resistor, Fxd, Met Flm, 21.5 ohms, 10%, 1/2W	28480	0698-3391	1
0698-3394	R: Fxd Met Flm 31.6 ohms 1% 1/2W	28480	0698-3394	1
0698-3440	R: Fxd Met Flm 196 ohms 1% 1/8W	28480	0698-3440	1
0698-3441	R: Fxd Met Flm 215 ohms 1% 1/8W	28480	0698-3441	3
0698-3442	R: Fxd Met Flm 237 ohms 1% 1/8W	28480	0698-3442	30
0698-3443	R: Fxd Met Flm 287 ohms 1% 1/8W	28480	0698-3443	5
0698-3444	R: Fxd Met Flm 316 ohms 1% 1/8W	28480	0698-3444	6
0698-3445	R: Fxd Met Flm 348 ohms 1% 1/8W	28480	0698-3445	7
0698-3446	R: Fxd Met Flm 383 ohms 1% 1/8W	28480	0698-3446	11
0698-3609★	Resistor, Fxd, Met Ox, 22 ohms, 5%, 2W	28480	0698-3609	1

★See table 2-26 for usage.

Table 3-1. Numerical Listing of Electrical Parts (Continued)

HP PART NO.	DESCRIPTION	MFR CODE	MFR PART NO.	TQ
0698-7214	R: Fxd Flm 121 ohms 2% 1/8W	28480	0698-7214	2
0698-7216	R: Fxd Met Flm 147 ohms 2% 1/8W	28480	0698-7216	1
0698-7217	R: Fxd Flm 162 ohms 2% 1/8W	28480	0698-7217	1
0698-7219	R: Fxd Flm 196 ohms 2% 1/8W	28480	0698-7219	3
0698-7220	R: Fxd Met Flm 215 ohms 2% 1/8W	28480	0698-7220	1
0698-7221	R: Fxd Flm 237 ohms 2% 1/8W	28480	0698-7221	4
0698-7222	R: Fxd Flm 261 ohms 2% 1/8W	28480	0698-7222	3
0698-7223	R: Fxd Flm 287 ohms 2% 1/8W	28480	0698-7223	2
0698-7224	R: Fxd Flm 316 ohms 2% 1/8W	28480	0698-7224	3
0698-7225	R: Fxd Flm 348 ohms 2% 1/8W	28480	0698-7225	16
0698-7226	R: Fxd Flm 383 ohms 2% 1/8W	28480	0698-7226	3
0698-7228	R: Fxd Flm 464 ohms 2% 1/8W	28480	0698-7228	18
0698-7229	R: Fxd Flm 511 ohms 2% 1/8W	28480	0698-7229	74
0698-7230	R: Fxd Flm 562 ohms 2% 1/8W	28480	0698-7230	1
0698-7231	R: Fxd Flm 619 ohms 2% 1/8W	28480	0698-7231	1
0698-7233	R: Fxd Flm 750 ohms 2% 1/8W	28480	0698-7233	1
0698-7234	R: Fxd Flm 825 ohms 2% 1/8W	28480	0698-7234	1
0698-7236	R: Fxd Flm 1K ohms 2% 1/8W	28480	0698-7236	36
0698-7240	R: Fxd Met Flm 1.47K ohms 2% 1/8W	28480	0698-7240	8
0698-7244	R: Fxd Flm 2.15K ohms 2% 1/8W	28480	0698-7244	2
0698-7253	R: Fxd Flm 5.11K ohms 2% 1/2W	28480	0698-7253	1
0698-7260	R: Fxd Flm 10K ohms 2% 1/8W	28480	0698-7260	1
0757-0280	R: Fxd Flm 1K ohms 1% 1/8W	28480	0757-0280	43
0757-0284	R: Fxd Flm 150 ohms 1% 1/8W	28480	0757-0284	3
0757-0399	R: Fxd Met Flm 82.5 ohms 1% 1/8W	28480	0757-0399	1
0757-0401	R: Fxd Met Flm 100 ohms 1% 1/8W	28480	0757-0401	2
0757-0403	R: Fxd Met Flm 121 ohms 1% 1/8W	28480	0757-0403	4
0757-0416	R: Fxd Met Flm 511 ohms 1% 1/8W	28480	0757-0416	50
0757-0418	R: Fxd Met Flm 619 ohms 1% 1/8W	28480	0757-0418	1
0757-0420	R: Fxd Met Flm 750 ohms 1% 1/8W	28480	0757-0420	2
0757-0427	R: Fxd Met Flm 1.5K ohms 1% 1/8W	28480	0757-0427	13
0757-0463	R: Fxd Met Flm 82.5K ohms 1% 1/8W	28480	0757-0463	1
0757-0818	Resistor, Fxd, Met Flm, 825 ohms, 1%, 1/2W	28480	0757-0818	2
0757-1000	Resistor, Fxd, Met Flm, 51.1 ohms, 1%, 1/2W	28480	0757-1000	2
0757-1092	Resistor, Fxd, Met Flm, 287 ohms, 1%, 1/2W	28480	0757-1092	2
0757-1094	R: Fxd Met Flm 1.47K ohms 1% 1/8W	28480	0757-1094	3
0811-2988★	R: Fxd WW 22 ohms 1% 7W	28480	0811-2988	1
1200-0199	Socket: Crystal	91506	8000-0432	1
1250-0118	Connector, Receptacle	24931	28JR128-1	1
1251-0313	Connector, Plug, AC, 3 pin	00000	OBD	1
1251-2364	Connector, PC Card, 86-pin	00779	2-67015-1	1
1400-0084	Fuseholder	75915	342014	2
1810-0030	Network: 7 resistors 1K ohms 5% 0.15W ea	28480	1810-0030	10
1810-0063	Resistive Network: 7 x 133 ohm 5% 2W ea	28480	1810-0063	3
1816-2060	IC: ROM No. 060	28480	1816-2060	1
1816-2061	IC: ROM No. 061	28480	1816-2061	1
1816-2062	IC: ROM No. 062	28480	1816-2062	1
1816-2063	IC: ROM No. 063	28480	1816-2063	1
1816-2064	IC: ROM No. 064	28480	1816-2064	1
1816-2065	IC: ROM No. 065	28480	1816-2065	1

★See table 2-26 for usage.

Table 3-1. Numerical Listing of Electrical Parts (Continued)

HP PART NO.	DESCRIPTION	MFR CODE	MFR PART NO.	TQ
1820-0140	IC: TTL Dual 4-Inpt And Buffer	04713	SC7513PK	11
1820-0141	IC: TTL Quad 2-Inpt And Gate	28480	1820-0141	46
1820-0186	IC: CTL Dual 2-Inpt And Gate	07263	U6A985649X	85
1820-0187	IC: CTL Dual 2-Inpt Nor Gate	07263	U6A985249X	4
1820-0205	IC: TTL Quad 2-Inpt Or Gate	28480	1820-0205	16
1820-0231	IC: TTL 4-Bit Sync Binary Counter	07263	U6B931659X	8
1820-0239	IC: TTL Quad 2-Inpt Nor Gate	28480	1820-0239	3
1820-0301	IC: TTL Quad Bi-Stable D-Latch	01295	SN7475N	24
1820-0370	IC: TTL HS Quad 2-Inpt Nand Gate	01295	SN74H00N	36
1820-0371	IC: TTL HS Triple 3-Inpt Nand Gate	01295	SN74H10N	15
1820-0372	IC: TTL Triple 3-Inpt And Gate	28480	1820-0372	14
1820-0373	IC: TTL HS Dual 4-Inpt Nand Gate	01295	SN74H20N	4
1820-0374	IC: TTL HS Dual 4-Inpt And Gate	01295	SN74H22N	4
1820-0375	IC: TTL HS 8-Inpt Nand Gate	01295	SN74H30N	7
1820-0376	IC: TTL HS Dual 4-Inpt Nand Buffer	01295	SN74H40N	1
1820-0377	IC: TTL HS Dual 2-Wide 2-Inpt	01295	SN74H50N	2
1820-0378	IC: TTL HS 2-Wide 2-Inpt	01295	SN74H51N	2
1820-0379	IC: TTL HS 4W 2-2-2-3 Inpt And/Or Gate	01295	SN74H52N	13
1820-0380	IC: TTL 4W 2-2-2-3 Inpt And/Or Gate	01295	SN74H53N	2
1820-0383	IC: TTL HS Dual 4-Inpt Expander	01295	SN74H60N	1
1820-0384	IC: TTL HS Triple 3-Inpt Expander	01295	SN74H61N	1
1820-0385	IC: TTL HS 4W 3-2-2-3 Inpt And/Or Exp.	01295	2N74H62N	1
1820-0424	IC: TTL HS Hex Inverter	04713	SN14751	31
1820-0437	IC: TTL Quad D F/F	04713	MC4015P	9
1820-0449	IC: TTL Dual D F/F	04713	MC3060P	12
1820-0451	IC: TTL Dual J-K F/F	04713	MC3062P	17
1820-0482	IC: CTL 1 of 8 Decoder	07263	SL15964	4
1820-0485	IC: CTL Hex Level Restorer	07263	U6B981649X	13
1820-0512	IC: TTL Dual D F/F	01295	SN74H74N	1
1820-0604	IC: TTL Dual 4-Inpt Nand Power Gate	04713	MC3025P	3
1820-0605	IC: TTL HS Quad 2-Inpt Nand Gate	01295	SN74H01N	4
1820-0606	IC: TTL Arith. Logic Unit/Function Gen.	01295	SN74181N	4
1820-0607	IC: TTL 4-Bit RT/LT Shift Register	04713	MC4012P	16
1820-0608	IC: TTL 1 of Decoder W/Enable	04713	MC4006P	12
1820-0609	IC: TTL Dual J-K F/F W/Com Clk and Reset	04713	MC3061P	11
1820-0610	IC: TTL Dual 4-Inpt Multiplexer	07263	U6B930959X	8
1820-0611	IC: TTL Look-Ahead Carry Generator	01295	SN74182N	1
1820-0612	IC: CTL 8-Bit Ram (4 x 2)	07263	U6A903059X	8
1820-0613	IC: HS Hex Inverter W/Open Coll	01295	SN74H05N	7
1820-0617	IC: TTL Quad 2-Inpt Excl Nor Gate	04713	MC3022P	4
1820-0620	IC: TTL Dual 4-Inpt Mutliplexer	01295	SN74153N	8
1820-0668	IC: TTL Hex Buffer/Driver W/Open Coll	01295	SN7407N	2
1820-0681	IC: TTL HS Quad 2-Inpt Nand Gate	01295	SN74S00N	1
1820-0683	IC: TTL HS Hex Inverter	01295	SN74S04N	1
1820-0686	IC: TTL Shottky Triple 3-Inpt And Gate	01295	SN74S11N	1
1820-0695	IC: TTL Dual J-K F/F	28480	1820-0695	2
1820-0769	IC: DTL Quad 2-Inpt Power Gate	28480	1820-0769	11
1820-0953	IC: CTL Triple 2-2-3-Inpt And Gate	14433	MC953	7
1820-0954	IC: CTL Dual 4-Inpt And Gate	07263	U6A995479X	5
1820-0955	IC: CTL 8-Inpt Dual Output And Gate	07263	U6A995579X	3

Table 3-1. Numerical Listing of Electrical Parts (Continued)

HP PART NO.	DESCRIPTION	MFR CODE	MFR PART NO.	TQ
1820-0964	IC: CTL Triple 3-3-1-Inpt And Gate	14433	MIC964	4
1820-0965	IC: CTL Quad 1-Inpt And Gate	07263	U6A996579X	5
1820-0966	IC: CTL Dual 2-Inpt And 2W And/Or Gate	14433	MIC966	19
1820-0971	IC: CTL Dual 2W 2-Inpt And/Or Gate	07263	U6A997179X	24
1854-0215	Tstr: Si NPN	80131	2N3904	5
1854-0477	Tstr: Si NPN	80131	2N2222A	4
1901-0040	Diode: Silicon 30 MA 30 WV	07263	FDG1088	1
1902-3043	Diode: Breakdown 3.32V 2%	04713	SZ10939-45	1
2110-0002	Fuse, 2A, 250V	75915	314012	1
2110-0249	Fuse, 12A, 250V	75915	312002	1
2140-0364	Lamp: Incandescent 0.06A 5.0V	28480	2140-0364	38
3100-3008	Switch, Rotary	76854	3P3P	1
3101-0973	Switch: Slide DPDT 0.5A 125V AC/DC	79727	G126-0018	2
3101-1213	Switch: Toggle DPST-DB Sub-miniature	81640	T8001	5
3101-1531	Switch: Reed	28480	3101-1531	38
3101-1657	Microswitch	14268	22-102000	1
3103-0015	Switch, Thermal	14604	3001	1
3160-0224	Fan: Tubeaxial	28480	3160-0224	2
8120-1851	Cable, Power, 10 feet (3048 millimeters) long	28480	8120-1851	1
8159-0005	Jumper Wire	28480	8159-0005	8
9100-2947	Filter, Line	28480	9100-2947	1
02100-60001	Arithmetic/Logic Card	28480	02100-60001	1
02100-60002	ROM Control Card	28480	02100-60002	1
02100-60003	Instruction Register Decoder Card	28480	02100-60003	1
02100-60004	Microinstruction Decoder 1 Card	28480	02100-60004	1
02100-60007	I/O Buffer Card	28480	02100-60007	1
02100-60014	Timing and Control Card	28480	02100-60014	1
02100-60015	Operator Panel Card	28480	02100-60015	1
02100-60022★	Microinstruction Decoder 2 Card	28480	02100-60022	1
02100-60024	I/O Control Card	28480	02100-60024	1
02100-60060	I/O Terminator Card	28480	02100-60060	1
02100-60112★	Microinstruction Decoder 2 Card	28480	02100-60112	1
	For 4K Memory, perform the following:			
	Add the following entries:			
0140-0196	C: Fxd Mica 150 PF 5%	72136	RDM15F141J3C	1
0140-0199	C: Fxd Mica 240 PF 5%	28480	0140-0199	1
0160-0127	C: Fxd Cer 1.0 UF 20% 25 VDCW	56289	5C13CS-CML	34
0160-0128	C: Fxd Cer 2.2 UF 20% 25 VDCW	56289	5C152C25-CML	3
0160-2199	C: Fxd Mica 30 PF 5% 300 VDCW	28480	0160-2199	2
0160-2307	C: Fxd Mica 47 PF 5%	28480	0160-2307	1
0160-2940	C: Fxd Mica 470 PF 5% 300 VDCW	72136	RDM15F471J3C	3
0160-3871	C: Fxd Mica 2000 PF 5% 100 VDCW	72136	RDM19F202J15	17
0160-3901	C: Fxd Cer 2.2 UF 20% 25 VDCW	56289	5C120-CML	17
0180-0094	C: Fxd Elect 100 uF +70 -10% 25 VDCW	56289	30D107G025DD2-DSM	12
0180-0116	C: Fxd Elect 6.8 UF 10% 35 VDCW	56289	150D685X9035B2-DYS	1
0180-0161	C: Fxd Elect 3.3 UF 20% 35 VDCW	56289	150D335X0035B2-DYS	2
0180-0229	C: Fxd Elect 33 UF 10% 10 VDCW	28480	0180-0229	3
0180-0374	C: Fxd Tant 10 UF 10% 20 VDCW	56289	150D106X9020B2-DYS	1

★ Indicates interchangeable cards. Computer uses one or the other.

Table 3-1. Numerical Listing of Electrical Parts (Continued)

HP PART NO.	DESCRIPTION	MFR CODE	MFR PART NO.	TQ
	For 4K Memory, perform the following (Contd):			
	Add the following entries (Contd):			
0698-0083	R: Fxd Met Flm 1.96K ohm 1% 1/8W	28480	0698-0083	5
0698-3151	R: Fxd Met Flm 2.87K ohms 1% 1/8W	28480	0698-3151	5
0698-3157	R: Fxd Met Flm 19.6K ohms 1% 1/8W	28480	0698-3157	5
0698-3437	R: Fxd Met Flm 133 ohms 1% 1/8W	28480	0698-3437	4
0698-3438	R: Fxd Met Flm 147 ohms 1% 1/8W	28480	0698-3438	1
0698-3447	R: Fxd Met Flm 422 ohms 1% 1/8W	28480	0698-3447	17
0698-7310	R: Fxd Flm 1.65K ohms 0.25% 1/8W	28480	0698-7310	34
0757-0274	R: Fxd Met Flm 1.21K ohms 1% 1/8W	28480	0757-0274	6
0757-0290	R: Fxd Met Flm 6.19K ohms 1% 1/8W	28480	0757-0290	17
0757-0316	R: Fxd Met Flm 42.2 ohms 1% 1/8W	28480	0757-0316	1
0757-0394	R: Fxd Met Flm 51.1 ohms 1% 1/8W	28480	0757-0394	18
0757-0417	R: Fxd Met Flm 562 ohms 1% 1/8W	28480	0757-0417	1
0757-0421	R: Fxd Met Flm 825 ohms 1% 1/8W	28480	0757-0421	4
0757-0441	R: Fxd Met Flm 8.25K ohms 1% 1/8W	28480	0757-0441	3
0757-1090	R: Fxd Met Flm 26.1 ohms 1% 1/2W	28480	0757-1090	4
0811-2031	R: Fxd WW 815 ohms 3% 1/4W	28480	0811-2031	1
0811-2084	R: Fxd WW 43 ohms 1% 5W	28480	0811-2084	4
0960-0111	Balun Module	28480	0960-0111	9
1810-0045	Resistor pack: 7 Res 200 ohms 5% 0.15W	28480	1810-0045	3
1810-0064	Delay Line	01961	GG4	1
1820-0207	IC: TTL Monostable Multivibrator	28480	1820-0207	3
1820-0233	IC: TTL Symup-on 4-Bit Binary Counter	01295	SN74193N	4
1820-0328	IC: TTL Quad 2-Inpt Nor Gate	04713	SN7402N	1
1820-0435	IC: TTL 8-Bit Odd/Even Gen/Checker	01295	SN74180N	2
1820-0616	IC: TTL 4-Bit 2-Inpt Multiplexer	07263	U7B932259X	4
1820-0619	IC: HS Dual 4-Inpt Nand Gate (open C)	01295	SN74H22N	1
1820-0621	IC: TTL Quad 2-Inpt Nand Buffer W/open C	01295	SN7438N	9
1821-0006	Tstr: NPN Network	28480	1821-0006	16
1853-0015	Tstr: Si PNP	80131	2N3640	4
1853-0086	Tstr: Si PNP	80131	2N5087	35
1854-0019	Tstr: Si NPN	28480	1854-0019	11
1854-0532	Tstr: Si NPN	02735	2N5262	34
1858-0001	Tstr: Array: Dual Diff Ampl W/Const Cur	02735	80381	9
1901-0620	Diode: Breakdown	28480	1901-0620	34
1910-0016	Diode: Germanium 100 MA/0.85V 60 PIV	93332	D2361	6
1990-0326	Diode: Light Emitter 50 MA/0.3V 650 PIV	28480	1990-0326	1
2100-1738	R: Var Flm 10K ohms 10% lin 1/2W	28480	2100-1738	2
2100-2061	R: Var Flm 200 ohms	28480	2100-2061	1
5080-0058	Conductor Assembly	28480	5080-0058	1
5080-0059	Pin, Diode	28480	5080-0059	7
5087-0002	4K Core Stack Assembly	28480	5087-0002	1
5087-1013	Diode: Module	28480	5087-1013	16
9100-3130	Transformer: Pulse	28480	9100-3130	16
9100-3180	Transformer	28480	9100-3180	9
02100-60008	Inhibit Driver Card	28480	02100-60008	1
02100-60010	Inhibit Driver Load Card	28480	02100-60010	1
02100-60011	Data Control Card	28480	02100-60011	1
02100-60012	X-Y Driver/Switch Card	28480	02100-60012	1
02100-60028	Cable Assembly	28480	02100-60028	1
02100-60029	Cable Assembly	28480	02100-60029	1
02100-60040	Core Stack/Sense Amplifier Card	28480	02100-60040	1
02100-60054	Connector Assembly	28480	02100-60054	1

Table 3-1. Numerical Listing of Electrical Parts (Continued)

HP PART NO.	DESCRIPTION	MFR CODE	MFR PART NO.	TQ
	For 4K Memory, perform the following (Contd):			
	Change the following entries:			
0140-0198	Add 1 to TQ listed.			
0160-2055	Add 26 to TQ listed.			
0180-0197	Add 6 to TQ listed.			
0698-0082	Add 22 to TQ listed.			
0698-3132	Add 2 to TQ listed.			
0698-3441	Add 1 to TQ listed.			
0698-3442	Add 4 to TQ listed.			
0698-3443	Add 1 to TQ listed.			
0698-3444	Add 33 to TQ listed.			
0698-3445	Add 9 to TQ listed.			
0698-3446	Add 2 to TQ listed.			
0757-0280	Add 50 to TQ listed.			
0757-0284	Add 1 to TQ listed.			
0757-0401	Add 6 to TQ listed.			
0757-0403	Add 98 to TQ listed.			
0757-0416	Add 4 to TQ listed.			
0757-0420	Add 1 to TQ listed.			
0811-2988	Add 17 to TQ listed.			
1820-0140	Add 2 to TQ listed.			
1820-0141	Add 2 to TQ listed.			
1820-0186	Add 2 to TQ listed.			
1820-0187	Add 2 to TQ listed.			
1820-0205	Add 3 to TQ listed.			
1820-0301	Add 4 to TQ listed.			
1820-0370	Add 3 to TQ listed.			
1820-0371	Add 2 to TQ listed.			
1820-0372	Add 1 to TQ listed.			
1820-0376	Add 1 to TQ listed.			
1820-0424	Add 2 to TQ listed.			
1820-0451	Add 3 to TQ listed.			
1820-0482	Add 9 to TQ listed.			
1820-0485	Add 3 to TQ listed.			
1820-0966	Add 1 to TQ listed.			
1820-0971	Add 8 to TQ listed.			
1854-0215	Add 18 to TQ listed.			
1901-0040	Add 96 to TQ listed.			
3101-1213	Add 1 to TQ listed.			
8159-0005	Add 6 to TQ listed.			
	For 8K Memory, perform the following:			
	Add the following entries:			
0140-0196	C: Fxd Mica 150 PF 5%	72136	RDM15F141J3C	1
0140-0199	C: Fxd Mica 240 PF 5%	28480	0140-0199	1
0160-0127	C: Fxd Cer 1.0 UF 20% 25 VDCW	56289	5C13CS-CML	36
0160-0128	C: Fxd Cer 2.2 UF 20% 25 VDCW	56289	5C152C25-CML	3
0160-2199	C: Fxd Mica 30 PF 5% 300 VDCW	28480	0160-2199	2

Table 3-1. Numerical Listing of Electrical Parts (Continued)

HP PART NO.	DESCRIPTION	MFR CODE	MFR PART NO.	TQ
	For 8K Memory, perform the following (Contd):			
	Add the following entries (Contd):			
0160-2306	C: Fxd Mica 27 PF 5%	28480	0160-2306	2
0160-2940	C: Fxd Mica 470 PF 5% 300 VDCW	72136	RDM15F471J3C	3
0160-3871	C: Fxd Mica 2000 PF 5% 100 VDCW	72136	RDM19F202J15	17
0160-3901	C: Fxd Cer 2.2 UF 20% 25 VDCW	56289	5C120-CML	17
0180-0094	C: Fxd Elect 100 UF +70 -10% 25 VDCW	56289	30D107G025DD2-DSM	12
0180-0116	C: Fxd Elect 6.8 UF 10% 35 VDCW	56289	150D685X9035B2-DYS	1
0180-0161	C: Fxd Elect 3.3 UF 20% 35 VDCW	56289	150D335X0035B2-DYS	2
0180-0229	C: Fxd Elect 33 UF 10% 10 VDCW	28480	0180-0229	3
0180-0374	C: Fxd Tant 10 UF 10% 20 VDCW	56289	150D106X9020B2-DYS	1
0698-0083	R: Fxd Met Flm 1.96K ohm 1% 1/8W	28480	0698-0083	5
0698-3151	R: Fxd Met Flm 2.87K ohms 1% 1/8W	28480	0698-3151	5
0698-3157	R: Fxd Met Flm 19.6K ohms 1% 1/8W	28480	0698-3157	5
0698-3430	R: Fxd Met Flm 21.5 ohms 1% 1/8W	28480	0698-3430	2
0698-3437	R: Fxd Met Flm 133 ohms 1% 1/8W	28480	0698-3437	4
0698-3438	R: Fxd Met Flm 147 ohms 1% 1/8W	28480	0698-3438	1
0698-3488	R: Fxd Met Flm 442 ohms 1% 1/8W	28480	0698-3488	68
0698-7310	R: Fxd Flm 1.65K ohms 0.25% 1/8W	28480	0698-7310	34
0757-0180	R: Fxd Met Flm 31.6 ohms 1% 1/8W	28480	0757-0180	69
0757-0274	R: Fxd Met Flm 1.21K ohms 1% 1/8W	28480	0757-0274	6
0757-0276	R: Fxd Met Flm 61.9 ohms 1% 1/8W	28480	0757-0276	2
0757-0316	R: Fxd Met Flm 42.2 ohms 1% 1/8W	28480	0757-0316	1
0757-0394	R: Fxd Met Flm 51.1 ohms 1% 1/8W	28480	0757-0394	18
0757-0421	R: Fxd Met Flm 825 ohms 1% 1/8W	28480	0757-0421	4
0757-0441	R: Fxd Met Flm 8.25K ohms 1% 1/8W	28480	0757-0441	3
0757-1090	R: Fxd Met Flm 26.1 ohms 1% 1/2W	28480	0757-1090	4
0811-2031	R: Fxd WW 815 ohms 3% 1/4W	28480	0811-2031	1
0811-2084	R: Fxd WW 43 ohms 1% 5W	28480	0811-2084	4
0960-0111	Balun Module	28480	0960-0111	17
1810-0045	Resistor pack: 7 Res 200 ohms 5% 0.15W	28480	1810-0045	5
1810-0064	Delay Line	01961	GG4	1
1820-0207	IC: TTL Monostable Multivibrator	28480	1820-0207	3
1820-0233	IC: TTL Symup-on 4-Bit Binary Counter	01295	SN74193N	4
1820-0328	IC: TTL Quad 2-Inpt Nor Gate	04713	SN7402N	1
1820-0435	IC: TTL 8-Bit Odd/Even Gen/Checker	01295	SN74180N	2
1820-0616	IC: TTL 4-Bit 2-Input Multiplexer	07263	U7B932259X	4
1820-0619	IC: HS Dual 4-Inpt Nand Gate (open C)	01295	SN74H22N	1
1820-0621	IC: TTL Quad 2-Inpt Nand Buffer W/Open C	01295	SN7438N	9
1820-0956	IC: CTL Dual 2-Inpt and Buffer	07263	U6A995679X	1
1821-0006	Tstr: NPN Network	28480	1821-0006	16
1853-0015	Tstr: Si PNP	80131	2N3640	4
1853-0086	Tstr: Si PNP	80131	2N5087	36
1854-0019	Tstr: Si NPN	28480	1854-0019	11
1854-0532	Tstr: Si NPN	02735	2N5262	34
1858-0001	Tstr: Array: Dual Diff Ampl W/Const Cur	02735	80381	17
1901-0620	Diode: Breakdown	28480	1901-0620	34
1910-0016	Diode: Germanium 100 MA/0.85V 60 PIV	93332	D2361	7
1990-0326	Diode: Light Emitter 50 MA/0.3V 650 PIV	28480	1990-0326	1
2100-1738	R: Var Flm 10K ohms 10% lin 1/2W	28480	2100-1738	2
2100-2061	R: Var Flm 200 ohms	28480	2100-2061	1

Table 3-1. Numerical Listing of Electrical Parts (Continued)

HP PART NO.	DESCRIPTION	MFR CODE	MFR PART NO.	TQ
	For 8K Memory, perform the following (Contd):			
	Add the following entries (Contd):			
5080-0058	Conductor Assembly	28480	5080-0058	1
5080-0059	Pin, Diode	28480	5080-0059	7
5087-0001	8K Core Stack Assembly	28480	5087-0001	1
5087-1013	Diode: Module	28480	5087-1013	16
9100-3130	Transformer: Pulse	28480	9100-3130	16
9100-3180	Transformer	28480	9100-3180	9
02100-60008	Inhibit Driver Card	28480	02100-60008	1
02100-60010	Inhibit Driver Load Card	28480	02100-60010	1
02100-60011	Data Control Card	28480	02100-60011	1
02100-60012	X-Y Driver/Switch Card	28480	02100-60012	1
02100-60028	Cable Assembly	28480	02100-60028	1
02100-60029	Cable Assembly	28480	02100-60029	1
02100-60054	Connector Assembly	28480	02100-60054	1
5060-8324 or 5060-8331	Core Stack/Sense Amplifier Card	28480	5060-8324 or 5060-8331	1
	Change the following entries:			
0140-0198	Add 1 to TQ listed.			
0160-2055	Add 17 to TQ listed.			
0180-0197	Add 6 to TQ listed.			
0698-0082	Add 21 to TQ listed.			
0698-3132	Add 3 to TQ listed.			
0698-3441	Add 1 to TQ listed.			
0698-3442	Add 4 to TQ listed.			
0698-3443	Add 1 to TQ listed.			
0698-3444	Add 23 to TQ listed.			
0698-3445	Add 9 to TQ listed.			
0698-3446	Add 2 to TQ listed.			
0757-0280	Add 49 to TQ listed.			
0757-0284	Add 1 to TQ listed.			
0757-0401	Add 6 to TQ listed.			
0757-0403	Add 98 to TQ listed.			
0757-0416	Add 4 to TQ listed.			
0811-2988	Add 17 to TQ listed.			
1820-0140	Add 2 to TQ listed.			
1820-0141	Add 2 to TQ listed.			
1820-0186	Add 2 to TQ listed.			
1820-0187	Add 2 to TQ listed.			
1820-0205	Add 3 to TQ listed.			
1820-0301	Add 4 to TQ listed.			
1820-0370	Add 2 to TQ listed.			
1820-0371	Add 2 to TQ listed.			
1820-0372	Add 1 to TQ listed.			
1820-0376	Add 1 to TQ listed.			
1820-0424	Add 2 to TQ listed.			
1820-0451	Add 3 to TQ listed.			
1820-0482	Add 9 to TQ listed.			

Table 3-1. Numerical Listing of Electrical Parts (Continued)

HP PART NO.	DESCRIPTION	MFR CODE	MFR PART NO.	TQ
	For 8K Memory, perform the following (Contd):			
	Change the following entries (Contd):			
1820-0485	Add 3 to TQ listed.			
1820-0966	Add 1 to TQ listed.			
1820-0971	Add 8 to TQ listed.			
1854-0215	Add 17 to TQ listed.			
1901-0040	Add 96 to TQ listed.			
3101-1213	Add 1 to TQ listed.			
5080-0059	Add 7 to TQ listed.			
8159-0005	Add 7 to TQ listed.			
	For 12K Memory, perform the following:			
	Add the following entries:			
0140-0196	C: Fxd Mica 150 PF 5%	72136	RDM15F131J3C	1
0140-0199	C: Fxd Mica 240 PF 5%	28480	0140-0199	1
0160-0127	C: Fxd Cer 1.0 UF 20% 25 VDCW	56289	5C13CS-CML	61
0160-0128	C: Fxd Cer 2.2 UF 20% 25 VDCW	56289	5C152C25-CML	3
0160-2199	C: Fxd Mica 30 PF 5% 300 VDCW	28480	0160-2199	2
0160-2306	C: Fxd Mica 27 PF 5%	28480	0160-2306	2
0160-2307	C: Fxd Mica 47 PF 5%	28480	0160-2307	1
0160-2940	C: Fxd Mica 470 PF 5% 300 VDCW	72136	RDM15F471J3C	3
0160-3871	C: Fxd Mica 2000 PF 5% 100 VDCW	72136	RDM19F202J15	17
0160-3901	C: Fxd Cer 2.2 UF 20% 25 VDCW	56289	5C120-CML	17
0180-0094	C: Fxd Elect 100 UF +70 -10% 25 VDCW	56289	30D107G025DD2-DSM	12
0180-0116	C: Fxd Elect 6.8 UF 10% 35 VDCW	56289	150D685X9035B2-DYS	1
0180-0161	C: Fxd Elect 3.3 UF 20% 35 VDCW	56289	150D335X0035B2-DYS	4
0180-0229	C: Fxd Elect 33 UF 10% 10 VDCW	28480	0180-0229	6
0180-0374	C: Fxd Tant 10 UF 10% 20 VDCW	56289	150D106X9020B2-DYS	1
0698-0083	R: Fxd Met Flm 1.96K ohm 1% 1/8W	28480	0698-0083	5
0698-3151	R: Fxd Met Flm 2.87K ohms 1% 1/8W	28480	0698-3151	5
0698-3157	R: Fxd Met Flm 19.6K ohms 1% 1/8W	28480	0698-3157	5
0698-3430	R: Fxd Met Flm 21.5 ohms 1% 1/8W	28480	0698-3430	2
0698-3437	R: Fxd Met Flm 133 ohms 1% 1/8W	28480	0698-3437	4
0698-3438	R: Fxd Met Flm 147 ohms 1% 1/8W	28480	0698-3438	1
0698-3447	R: Fxd Met Flm 422 ohms 1% 1/8W	28480	0698-3447	17
0698-3488	R: Fxd Met Flm 442 ohms 1% 1/8W	28480	0698-3488	68
0698-7310	R: Fxd Flm 1.65K ohms 0.25% 1/8W	28480	0698-7310	68
0757-0180	R: Fxd Met Flm 31.6 ohms 1% 1/8W	28480	0757-0180	138
0757-0274	R: Fxd Met Flm 1.21K ohms 1% 1/8W	28480	0757-0274	8
0757-0276	R: Fxd Met Flm 61.9 ohms 1% 1/8W	28480	0757-0276	2
0757-0290	R: Fxd Met Flm 6.19K ohms 1% 1/8W	28480	0757-0290	17
0757-0316	R: Fxd Met Flm 42.2 ohms 1% 1/8W	28480	0757-0316	1
0757-0394	R: Fxd Met Flm 51.1 ohms 1% 1/8W	28480	0757-0394	20
0757-0417	R: Fxd Met Flm 562 ohms 1% 1/8W	28480	0757-0417	1
0757-0421	R: Fxd Met Flm 825 ohms 1% 1/8W	28480	0757-0421	8
0757-0441	R: Fxd Met Flm 8.25K ohms 1% 1/8W	28480	0757-0441	3
0757-1090	R: Fxd Met Flm 26.1 ohms 1% 1/2W	28480	0757-1090	8
0811-2031	R: Fxd WW 815 ohms 3% 1/4W	28480	0811-2031	1

Table 3-1. Numerical Listing of Electrical Parts (Continued)

HP PART NO.	DESCRIPTION	MFR CODE	MFR PART NO.	TQ
	For 12K Memory, perform the following (Contd):			
	Add the following entries (Contd):			
0960-0111	Balun Module	28480	0960-0111	26
1810-0045	Resistor pack: 7 Res 200 ohms 5% 0.15W	28480	1810-0045	8
1810-0064	Delay Line	01961	GG4	1
1820-0207	IC: TTL Monostable Multivibrator	28480	1820-0207	3
1820-0233	IC: TTL Symup-on 4-Bit Binary Counter	01295	SN74193N	4
1820-0328	IC: TTL Quad 2-Inpt Nor Gate	04713	SN7402N	1
1820-0435	IC: TTL 8-Bit Odd/Even Gen/Checker	01295	SN74180N	2
1820-0616	IC: TTL 4-Bit 2-Inpt Multiplexer	07263	U7B932259X	4
1820-0619	IC: HS Dual 4-Inpt Nand Gate (open C)	01295	SN74H22N	1
1820-0621	IC: TTL Quad 2-Inpt Nand Buffer W/open C	01295	SN7438N	17
1820-0956	IC: CTL Dual 2-Input and Buffer	07263	U6A995679X	1
1821-0006	Tstr: NPN Network	28480	1821-0006	32
1853-0015	Tstr: Si PNP	80131	2N3640	8
1853-0086	Tstr: Si PNP	80131	2N5087	71
1854-0019	Tstr: Si NPN	28480	1854-0019	15
1854-0532	Tstr: Si NPN	02735	2N5262	68
1858-0001	Tstr: Array: Dual Diff Ampl W/Const Cur	02735	80381	26
1901-0620	Diode: Breakdown	28480	1901-0620	68
1910-0016	Diode: Germanium 100 MA/0.85V 60 PIV	93332	D2361	8
1990-0326	Diode: Light Emitter 50 MA/0.3V 650 PIV	28480	1990-0326	1
2100-1738	R: Var Flm 10K ohms 10% lin 1/2W	28480	2100-1738	2
2100-2061	R: Var Flm 200 ohms	28480	2100-2061	2
5080-0058	Conductor Assembly	28480	5080-0058	1
5080-0059	Pin, Diode	28480	5080-0059	7
5087-0001	8K Core Stack Assembly	28480	5087-0001	1
5087-0002	4K Core Stack Assembly	28480	5087-0002	1
5087-1013	Diode: Module	28480	5087-1013	32
9100-3130	Transformer: Pulse	28480	9100-3130	32
9100-3180	Transformer	28480	9100-3180	17
02100-60009	Inhibit Driver Card	28480	02100-60009	1
02100-60010	Inhibit Driver Load Card	28480	02100-60010	1
02100-60011	Data Control Card	28480	02100-60011	1
02100-60012	X-Y Driver/Switch Card	28480	02100-60012	2
02100-60028	Cable Assembly	28480	02100-60028	1
02100-60029	Cable Assembly	28480	02100-60029	1
02100-60040	Core Stack/Sense Amplifier Card	28480	02100-60040	1
02100-60052	Connector Assembly	28480	02100-60052	1
5060-8324 or 5060-8331	Core Stack/Sense Amplifier Card	28480	5060-8324 or 5060-8331	1
	Change the following entries:			
0140-0198	Add 1 to TQ listed.			
0160-2055	Add 26 to TQ listed.			
0180-0197	Add 6 to TQ listed.			
0698-0082	Add 22 to TQ listed.			
0698-3132	Add 3 to TQ listed.			

Table 3-1. Numerical Listing of Electrical Parts (Continued)

HP PART NO.	DESCRIPTION	MFR CODE	MFR PART NO.	TQ
	For 12K Memory, perform the following (Contd):			
	Change the following entries (Contd):			
0698-3441	Add 1 to TQ listed.			
0698-3442	Add 4 to TQ listed.			
0698-3443	Add 1 to TQ listed.			
0698-3444	Add 49 to TQ listed.			
0698-3445	Add 9 to TQ listed.			
0698-3446	Add 2 to TQ listed.			
0757-0280	Add 86 to TQ listed.			
0757-0284	Add 1 to TQ listed.			
0757-0401	Add 7 to TQ listed.			
0757-0403	Add 196 to TQ listed.			
0757-0416	Add 4 to TQ listed.			
0757-0420	Add 1 to TQ listed.			
0811-2988	Add 17 to TQ listed.			
1820-0140	Add 3 to TQ listed.			
1820-0141	Add 2 to TQ listed.			
1820-0186	Add 2 to TQ listed.			
1820-0187	Add 2 to TQ listed.			
1820-0205	Add 3 to TQ listed.			
1820-0301	Add 4 to TQ listed.			
1820-0370	Add 3 to TQ listed.			
1820-0371	Add 2 to TQ listed.			
1820-0372	Add 1 to TQ listed.			
1820-0376	Add 1 to TQ listed.			
1820-0424	Add 2 to TQ listed.			
1820-0451	Add 3 to TQ listed.			
1820-0482	Add 17 to TQ listed.			
1820-0485	Add 3 to TQ listed.			
1820-0966	Add 1 to TQ listed.			
1820-0971	Add 8 to TQ listed.			
1854-0215	Add 35 to TQ listed.			
1901-0040	Add 192 to TQ listed.			
3101-1213	Add 1 to TQ listed.			
8159-0005	Add 13 to TQ listed.			
	For 16K Memory, perform the following:			
	Add the following entries:			
0140-0196	C: Fxd Mica 150 PF 5%	72136	RDM15F141J3C	1
0140-0199	C: Fxd Mica 240 PF 5%	28480	0140-0199	1
0160-0127	C: Fxd Cer 1.0 UF 20% 25 VDCW	56289	5C13CS-CML	63
0160-0128	C: Fxd Cer 2.2 UF 20% 25 VDCW	56289	5C152C25-CML	3
0160-2199	C: Fxd Mica 30 PF 5% 300 VDCW	28480	0160-2199	2

Table 3-1. Numerical Listing of Electrical Parts (Continued)

HP PART NO.	DESCRIPTION	MFR CODE	MFR PART NO.	TQ
	For 16K Memory, perform the following (Contd):			
	Add the following entries (Contd):			
0160-2306	C: Fxd Mica 27 PF 5%	28480	0160-2306	4
0160-2940	C: Fxd Mica 470 PF 5% 300 VDCW	72136	RDM15F471J3C	6
0160-3871	C: Fxd Mica 2000 PF 5% 100 VDCW	72136	RDM19F202J15	17
0160-3901	C: Fxd Cer 2.2 UF 20% 25 VDCW	56289	5C120-CML	17
0180-0094	C: Fxd Elect 100 UF +70 -10% 25 VDCW	56289	30D107G025DD2-DSM	12
0180-0116	C: Fxd Elect 6.8 UF 10% 35 VDCW	56289	150D685X9035B2-DYS	1
0180-0161	C: Fxd Elect 3.3 UF 20% 35 VDCW	56289	150D335X0035B2-DYS	4
0180-0229	C: Fxd Elect 33 UF 10% 10 VDCW	28480	0180-0229	6
0180-0374	C: Fxd Tant 10 UF 10% 20 VDCW	56289	150D106X9020B2-DYS	1
0698-0083	R: Fxd Met Flm 1.96K ohm 1% 1/8W	28480	0698-0083	5
0698-3151	R: Fxd Met Flm 2.87K ohms 1% 1/8W	28480	0698-3151	5
0698-3157	R: Fxd Met Flm 19.6K ohms 1% 1/8W	28480	0698-3157	5
0698-3430	R: Fxd Met Flm 21.5 ohms 1% 1/8W	28480	0698-3430	4
0698-3437	R: Fxd Met Flm 133 ohms 1% 1/8W	28480	0698-3437	8
0698-3438	R: Fxd Met Flm 147 ohms 1% 1/8W	28480	0698-3438	1
0698-3488	R: Fxd Met Flm 442 ohms 1% 1/8W	28480	0698-3488	136
0698-7310	R: Fxd Flm 1.65K ohms 0.25% 1/8W	28480	0698-7310	68
0757-0180	R: Fxd Met Flm 31.6 ohms 1% 1/8W	28480	0757-0180	138
0757-0274	R: Fxd Met Flm 1.21K ohms 1% 1/8W	28480	0757-0274	10
0757-0276	R: Fxd Met Flm 61.9 ohms 1% 1/8W	28480	0757-0276	4
0757-0316	R: Fxd Met Flm 42.2 ohms 1% 1/8W	28480	0757-0316	1
0757-0394	R: Fxd Met Flm 51.1 ohms 1% 1/8W	28480	0757-0394	20
0757-0421	R: Fxd Met Flm 825 ohms 1% 1/8W	28480	0757-0421	8
0757-0441	R: Fxd Met Flm 8.25K ohms 1% 1/8W	28480	0757-0441	3
0757-1090	R: Fxd Met Flm 26.1 ohms 1% 1/2W	28480	0757-1090	8
0811-2031	R: Fxd WW 815 ohms 3% 1/4W	28480	0811-2031	1
0960-0111	Balun Module	28480	0960-0111	34
1810-0045	Resistor pack: 7 Res 200 ohms 5% 0.15W	28480	1810-0045	10
1810-0064	Delay Line	01961	GG4	1
1820-0207	IC: TTL Monostable Multivibrator	28480	1820-0207	3
1820-0233	IC: TTL Symup-on 4-Bit Binary Counter	01295	SN74193N	4
1820-0328	IC: TTL Quad 2-Inpt Nor Gate	04713	SN7402N	1
1820-0435	IC: TTL 8-Bit Odd/Even Gen/Checker	01295	SN74180N	2
1820-0616	IC: TTL 4-Bit 2-Input Multiplexer	07263	U7B932259X	4
1820-0619	IC: HS Dual 4-Inpt Nand Gate (open C)	01295	SN74H22N	1
1820-0621	IC: TTL Quad 2-Inpt Nand Buffer W/Open C	01295	SN7438N	17
1820-0956	IC: CTL Dual 2-Inpt and Buffer	07263	U6A995679X	2
1821-0006	Tstr: NPN Network	28480	1821-0006	32
1853-0015	Tstr: Si PNP	80131	2N3640	8
1853-0086	Tstr: Si PNP	80131	2N5087	72
1854-0019	Tstr: Si NPN	28480	1854-0019	15
1854-0532	Tstr: Si NPN	02735	2N5262	68
1858-0001	Tstr: Array: Dual Diff Ampl W/Const Cur	02735	80381	17
1901-0620	Diode: Breakdown	28480	1901-0620	68
1910-0016	Diode: Germanium 100 MA/0.85V 60 PIV	93332	D2361	9
1990-0326	Diode: Light Emitter 50 MA/0.3V 650 PIV	28480	1990-0326	1
2100-1738	R: Var Flm 10K ohms 10% lin 1/2W	28480	2100-1738	2
2100-2061	R: Var Flm 200 ohms	28480	2100-2061	2

Table 3-1. Numerical Listing of Electrical Parts (Continued)

HP PART NO.	DESCRIPTION	MFR CODE	MFR PART NO.	TQ
	For 16K Memory, perform the following (Contd):			
	Add the following entries (Contd):			
5080-0058	Conductor Assembly	28480	5080-0058	1
5080-0059	Pin, Diode	28480	5080-0059	7
5087-0001	8K Core Stack Assembly	28480	5087-0001	2
5087-1013	Diode: Module	28480	5087-1013	32
9100-3130	Transformer: Pulse	28480	9100-3130	32
9100-3180	Transformer	28480	9100-3180	17
02100-60009	Inhibit Driver Card	28480	02100-60009	1
02100-60010	Inhibit Driver Load Card	28480	02100-60010	1
02100-60011	Data Control Card	28480	02100-60011	1
02100-60012	X-Y Driver/Switch Card	28480	02100-60012	2
02100-60028	Cable Assembly	28480	02100-60028	1
02100-60029	Cable Assembly	28480	02100-60029	1
02100-60052	Connector Assembly	28480	02100-60052	1
02100-60054	Connector Assembly	28480	02100-60054	1
5060-8324 or 5060-8331	Core Stack/Sense Amplifier Card	28480	5060-8324 or 5060-8331	2
	Change the following entries:			
0140-0198	Add 1 to TQ listed.			
0160-2055	Add 17 to TQ listed.			
0180-0197	Add 6 to TQ listed.			
0698-0082	Add 21 to TQ listed.			
0698-3132	Add 4 to TQ listed.			
0698-3442	Add 4 to TQ listed.			
0698-3443	Add 1 to TQ listed.			
0698-3444	Add 49 to TQ listed.			
0698-3445	Add 9 to TQ listed.			
0698-3446	Add 2 to TQ listed.			
0757-0280	Add 85 to TQ listed.			
0757-0284	Add 1 to TQ listed.			
0757-0401	Add 7 to TQ listed.			
0757-0403	Add 196 to TQ listed.			
0757-0416	Add 4 to TQ listed.			
0811-2988	Add 17 to TQ listed.			
1820-0140	Add 3 to TQ listed.			
1820-0141	Add 2 to TQ listed.			
1820-0186	Add 2 to TQ listed.			
1820-0187	Add 2 to TQ listed.			
1820-0205	Add 3 to TQ listed.			
1820-0301	Add 4 to TQ listed.			
1820-0370	Add 2 to TQ listed.			
1820-0371	Add 2 to TQ listed.			
1820-0372	Add 1 to TQ listed.			
1820-0376	Add 1 to TQ listed.			
1820-0424	Add 2 to TQ listed.			
1820-0451	Add 3 to TQ listed.			
1820-0482	Add 17 to TQ listed.			

Table 3-1. Numerical Listing of Electrical Parts (Continued)

HP PART NO.	DESCRIPTION	MFR CODE	MFR PART NO.	TQ
	For 16K Memory, perform the following (Contd):			
	Change the following entries (Contd):			
1820-0485	Add 3 to TQ listed.			
1820-0966	Add 1 to TQ listed.			
1820-0971	Add 8 to TQ listed.			
1854-0215	Add 34 to TQ listed.			
1901-0040	Add 192 to TQ listed.			
3101-1213	Add 1 to TQ listed.			
5080-0059	Add 7 to TQ listed.			
8159-0005	Add 14 to TQ listed.			
	For 24K Memory, perform the following:			
	Add the following entries:			
0140-0196	C: Fxd Mica 150 PF 5%	72136	RDM15F141J3C	1
0140-0199	C: Fxd Mica 240 PF 5%	28480	0140-0199	1
0160-0127	C: Fxd Cer 1.0 UF 20% 25 VDCW	56289	5C13CS-CML	100
0160-0128	C: Fxd Cer 2.2 UF 20% 25 VDCW	56289	5C152C25-CML	6
0160-2199	C: Fxd Mica 30 PF 5% 300 VDCW	28480	0160-2199	2
0160-2306	C: Fxd Mica 27 PF 5%	28480	0160-2306	6
0160-2940	C: Fxd Mica 470 PF 5% 300 VDCW	72136	RDM15F471J3C	9
0160-3871	C: Fxd Mica 2000 PF 5% 100 VDCW	72136	RDM19F202J15	17
0160-3901	C: Fxd Cer 2.2 UF 20% 25 VDCW	56289	5C120-CML	17
0180-0094	C: Fxd Elect 100 UF +70 -10% 25 VDCW	56289	30D107G025DD2-DSM	12
0180-0116	C: Fxd Elect 6.8 UF 10% 35 VDCW	56289	150D685X9035B2-DYS	2
0180-0161	C: Fxd Elect 3.3 UF 20% 35 VDCW	56289	150D335X0035B2-DYS	6
0180-0229	C: Fxd Elect 33 UF 10% 10 VDCW	28480	0180-0229	9
0180-0374	C: Fxd Tant 10 UF 10% 20 VDCW	56289	150D106X9020B2-DYS	2
0698-0083	R: Fxd Met Flm 1.96K ohm 1% 1/8W	28480	0698-0083	5
0698-3151	R: Fxd Met Flm 2.87K ohms 1% 1/8W	28480	0698-3151	5
0698-3157	R: Fxd Met Flm 19.6K ohms 1% 1/8W	28480	0698-3157	5
0698-3430	R: Fxd Met Flm 21.5 ohms 1% 1/8W	28480	0698-3430	6
0698-3437	R: Fxd Met Flm 133 ohms 1% 1/8W	28480	0698-3437	12
0698-3438	R: Fxd Met Flm 147 ohms 1% 1/8W	28480	0698-3438	1
0698-3488	R: Fxd Met Flm 442 ohms 1% 1/8W	28480	0698-3488	136
0698-7310	R: Fxd Flm 1.65K ohms 0.25% 1/8W	28480	0698-7310	102
0757-0180	R: Fxd Met Flm 31.6 ohms 1% 1/8W	28480	0757-0180	207
0757-0274	R: Fxd Met Flm 1.21K ohms 1% 1/8W	28480	0757-0274	14
0757-0276	R: Fxd Met Flm 61.9 ohms 1% 1/8W	28480	0757-0276	6
0757-0316	R: Fxd Met Flm 42.2 ohms 1% 1/8W	28480	0757-0316	1
0757-0394	R: Fxd Met Flm 51.1 ohms 1% 1/8W	28480	0757-0394	40
0757-0421	R: Fxd Met Flm 825 ohms 1% 1/8W	28480	0757-0421	12
0757-0441	R: Fxd Met Flm 8.25K ohms 1% 1/8W	28480	0757-0441	3
0757-1090	R: Fxd Met Flm 26.1 ohms 1% 1/2W	28480	0757-1090	12
0811-2031	R: Fxd WW 815 ohms 3% 1/4W	28480	0811-2031	1
0960-0111	Balun Module	28480	0960-0111	51
1810-0045	Resistor pack: 7 Res 200 ohms 5% 0.15W	28480	1810-0045	15

Table 3-1. Numerical Listing of Electrical Parts (Continued)

HP PART NO.	DESCRIPTION	MFR CODE	MFR PART NO.	TQ
	For 24K Memory, perform the following (Contd):			
	Add the following entries (Contd):			
1810-0064	Delay Line	01961	GG4	1
1820-0207	IC: TTL Monostable Multivibrator	28480	1820-0207	3
1820-0233	IC: TTL Symup-on 4-Bit Binary Counter	01295	SN74193N	4
1820-0328	IC: TTL Quad 2-Inpt Nor Gate	04713	SN7402N	1
1820-0435	IC: TTL 8-Bit Odd/Even Gen/Checker	01295	SN74180N	2
1820-0616	IC: TTL 4-Bit 2-Input Multiplexer	07263	U7B932259X	4
1820-0619	IC: HS Dual 4-Inpt Nand Gate (open C)	01295	SN74H22N	1
1820-0621	IC: TTL Quad 2-Inpt Nand Buffer W/Open C	01295	SN7438N	34
1820-0956	IC: CTL Dual 2-Inpt and Buffer	07263	U6A995679X	3
1821-0006	Tstr: NPN Network	28480	1821-0006	54
1853-0015	Tstr: Si PNP	80131	2N3640	12
1853-0086	Tstr: Si PNP	80131	2N5087	108
1854-0019	Tstr: Si NPN	28480	1854-0019	19
1854-0532	Tstr: Si NPN	02735	2N5262	136
1858-0001	Tstr: Array: Dual Diff Ampl W/Const Cur	02735	80381	21
1901-0620	Diode: Breakdown	28480	1901-0620	136
1910-0016	Diode: Germanium 100 MA/0.85V 60 PIV	93332	D2361	11
1990-0326	Diode: Light Emitter 50 MA/0.3V 650 PIV	28480	1990-0326	1
2100-1738	R: Var Flm 10K ohms 10% lin 1/2W	28480	2100-1738	2
2100-2061	R: Var Flm 200 ohms	28480	2100-2061	3
5080-0058	Conductor Assembly	28480	5080-0058	1
5080-0059	Pin, Diode	28480	5080-0059	7
5087-0001	8K Core Stack Assembly	28480	5087-0001	3
5087-1013	Diode: Module	28480	5087-1013	48
9100-3130	Transformer: Pulse	28480	9100-3130	48
9100-3180	Transformer	28480	9100-3180	34
02100-60009	Inhibit Driver Card ,	28480	02100-60009	2
02100-60010	Inhibit Driver Load Card	28480	02100-60010	1
02100-60011	Data Control Card	28480	02100-60011	1
02100-60012	X-Y Driver/Switch Card	28480	02100-60012	3
02100-60018	Cable Assembly	28480	02100-60018	2
02100-60052	Connector Assembly	28480	02100-60052	2
02100-60054	Connector Assembly	28480	02100-60054	1
5060-8324 or 5060-8331	Core Stack/Sense Amplifier Card	28480	5060-8324 or 5060-8331	3
	Change the following entries:			
0140-0198	Add 1 to TQ listed.			
0160-2055	Add 17 to TQ listed.			
0180-0197	Add 6 to TQ listed.			
0698-0082	Add 21 to TQ listed.			
0698-3132	Add 5 to TQ listed.			
0698-3442	Add 4 to TQ listed.			
0698-3443	Add 1 to TQ listed.			
0698-3444	Add 65 to TQ listed.			
0698-3445	Add 9 to TQ listed.			
0698-3446	Add 2 to TQ listed.			

Table 3-1. Numerical Listing of Electrical Parts (Continued)

HP PART NO.	DESCRIPTION	MFR CODE	MFR PART NO.	TQ
	For 24K Memory, perform the following (Contd):			
	Change the following entries (Contd):			
0757-0280	Add 121 to TQ listed.			
0757-0284	Add 1 to TQ listed.			
0757-0401	Add 8 to TQ listed.			
0757-0403	Add 328 to TQ listed.			
0757-0416	Add 4 to TQ listed.			
0811-2988	Add 17 to TQ listed.			
1820-0140	Add 5 to TQ listed.			
1820-0141	Add 2 to TQ listed.			
1820-0186	Add 2 to TQ listed.			
1820-0187	Add 2 to TQ listed.			
1820-0205	Add 3 to TQ listed.			
1820-0301	Add 4 to TQ listed.			
1820-0370	Add 2 to TQ listed.			
1820-0371	Add 2 to TQ listed.			
1820-0372	Add 1 to TQ listed.			
1820-0376	Add 1 to TQ listed.			
1820-0424	Add 2 to TQ listed.			
1820-0451	Add 3 to TQ listed.			
1820-0482	Add 25 to TQ listed.			
1820-0485	Add 3 to TQ listed.			
1820-0966	Add 1 to TQ listed.			
1820-0971	Add 8 to TQ listed.			
1854-0215	Add 51 to TQ listed.			
1901-0040	Add 288 to TQ listed.			
3101-1213	Add 1 to TQ listed.			
5080-0059	Add 7 to TQ listed.			
8159-0005	Add 21 to TQ listed.			
	For 32K Memory, perform the following:			
	Add the following entries:			
0140-0196	C: Fxd Mica 150 PF 5%	72136	RDM15F141J3C	1
0140-0199	C: Fxd Mica 240 PF 5%	28480	0140-0199	1
0160-0127	C: Fxd Cer 1.0 UF 20% 25 VDCW	56289	5C13CS-CML	119
0160-0128	C: Fxd Cer 2.2 UF 20% 25 VDCW	56289	5C152C25-CML	6
0160-2199	C: Fxd Mica 30 PF 5% 300 VDCW	28480	0160-2199	2
0160-2306	C: Fxd Mica 27 PF 5%	28480	0160-2306	8
0160-2940	C: Fxd Mica 470 PF 5% 300 VDCW	72136	RDM15F471J3C	12
0160-3871	C: Fxd Mica 2000 PF 5% 100 VDCW	72136	RDM19F202J15	17
0160-3901	C: Fxd Cer 2.2 UF 20% 25 VDCW	56289	5C120-CML	17
0180-0094	C: Fxd Elect 100 UF +70 -10% 25 VDCW	56289	30D107G025DD2-DSM	12
0180-0116	C: Fxd Elect 6.8 UF 10% 35 VDCW	56289	150D685X9035B2-DYS	2
0180-0161	C: Fxd Elect 3.3 UF 20% 35 VDCW	56289	150D335X0035B2-DYS	8
0180-0229	C: Fxd Elect 33 UF 10% 10 VDCW	28480	0180-0229	12
0180-0374	C: Fxd Tant 10 UF 10% 20 VDCW	56289	150D106X9020B2-DYS	2

Table 3-1. Numerical Listing of Electrical Parts (Continued)

HP PART NO.	DESCRIPTION	MFR CODE	MFR PART NO.	TQ
	For 32K Memory, perform the following (Contd):			
	Add the following entries (Contd):			
0698-0083	R: Fxd Met Flm 1.96K ohm 1% 1/8W	28480	0698-0083	5
0698-3151	R: Fxd Met Flm 2.87K ohms 1% 1/8W	28480	0698-3151	5
0698-3157	R: Fxd Met Flm 19.6K ohms 1% 1/8W	28480	0698-3157	5
0698-3430	R: Fxd Met Flm 21.5 ohms 1% 1/8W	28480	0698-3430	8
0698-3437	R: Fxd Met Flm 133 ohms 1% 1/8W	28480	0698-3437	16
0698-3438	R: Fxd Met Flm 147 ohms 1% 1/8W	28480	0698-3438	1
0698-3488	R: Fxd Met Flm 442 ohms 1% 1/8W	28480	0698-3488	272
0698-7310	R: Fxd Flm 1.65K ohms 0.25% 1/8W	28480	0698-7310	136
0757-0180	R: Fxd Met Flm 31.6 ohms 1% 1/8W	28480	0757-0180	276
0757-0274	R: Fxd Met Flm 1.21K ohms 1% 1/8W	28480	0757-0274	18
0757-0276	R: Fxd Met Flm 61.9 ohms 1% 1/8W	28480	0757-0276	8
0757-0316	R: Fxd Met Flm 42.2 ohms 1% 1/8W	28480	0757-0316	1
0757-0394	R: Fxd Met Flm 51.1 ohms 1% 1/8W	28480	0757-0394	40
0757-0421	R: Fxd Met Flm 825 ohms 1% 1/8W	28480	0757-0421	16
0757-0441	R: Fxd Met Flm 8.25K ohms 1% 1/8W	28480	0757-0441	3
0757-1090	R: Fxd Met Flm 26.1 ohms 1% 1/2W	28480	0757-1090	16
0811-2031	R: Fxd WW 815 ohms 3% 1/4W	28480	0811-2031	1
0960-0111	Balun Module	28480	0960-0111	68
1810-0045	Resistor pack: 7 Res 200 ohms 5% 0.15W	28480	1810-0045	20
1810-0064	Delay Line	01961	GG4	1
1820-0207	IC: TTL Monostable Multivibrator	28480	1820-0207	3
1820-0233	IC: TTL Symup-on 4-Bit Binary Counter	01295	SN74193N	4
1820-0328	IC: TTL Quad 2-Inpt Nor Gate	04713	SN7402N	1
1820-0435	IC: TTL 8-Bit Odd/Even Gen/Checker	01295	SN74180N	2
1820-0616	IC: TTL 4-Bit 2-Input Multiplexer	07263	U7B932259X	4
1820-0619	IC: HS Dual 4-Inpt Nand Gate (open C)	01295	SN74H22N	1
1820-0621	IC: TTL Quad 2-Inpt Nand Buffer W/Open C	01295	SN7438N	34
1820-0956	IC: CTL Dual 2-Inpt and Buffer	07263	U6A995679X	4
1821-0006	Tstr: NPN Network	28480	1821-0006	64
1853-0015	Tstr: Si PNP	80131	2N3640	16
1853-0086	Tstr: Si PNP	80131	2N5087	144
1854-0019	Tstr: Si NPN	28480	1854-0019	23
1854-0532	Tstr: Si NPN	02735	2N5262	132
1858-0001	Tstr: Array: Dual Diff Ampl W/Const Cur	02735	80381	68
1901-0620	Diode: Breakdown	28480	1901-0620	272
1910-0016	Diode: Germanium 100 MA/0.85V 60 PIV	93332	D2361	13
1990-0326	Diode: Light Emitter 50 MA/0.3V 650 PIV	28480	1990-0326	1
2100-1738	R: Var Flm 10K ohms 10% lin 1/2W	28480	2100-1738	2
2100-2061	R: Var Flm 200 ohms	28480	2100-2061	4
5080-0058	Conductor Assembly	28480	5080-0058	1
5080-0059	Pin, Diode	28480	5080-0059	7
5087-0001	8K Core Stack Assembly	28480	5087-0001	4
5087-1013	Diode: Module	28480	5087-1013	64
9100-3130	Transformer: Pulse	28480	9100-3130	64

Table 3-1. Numerical Listing of Electrical Parts (Continued)

HP PART NO.	DESCRIPTION	MFR CODE	MFR PART NO.	TQ
	For 32K Memory, perform the following (Contd):			
	Add the following entries (Contd):			
9100-3180	Transformer	28480	9100-3180	34
02100-60009	Inhibit Driver Card	28480	02100-60009	2
02100-60010	Inhibit Driver Load Card	28480	02100-60010	1
02100-60011	Data Control Card	28480	02100-60011	1
02100-60012	X-Y Driver/Switch Card	28480	02100-60012	4
02100-60018	Cable Assembly	28480	02100-60018	2
02100-60052	Connector Assembly	28480	02100-60052	2
02100-60054	Connector Assembly	28480	02100-60054	2
5060-8324 or 5060-8331	Core Stack/Sense Amplifier Card	28480	5060-8324 or 5060-8331	4
	Change the following entries:			
0140-0198	Add 1 to TQ listed.			
0160-2055	Add 17 to TQ listed.			
0180-0197	Add 6 to TQ listed.			
0698-0082	Add 21 to TQ listed.			
0698-3132	Add 6 to TQ listed.			
0698-3442	Add 4 to TQ listed.			
0698-3443	Add 1 to TQ listed.			
0698-3444	Add 81 to TQ listed.			
0698-3445	Add 9 to TQ listed.			
0698-3446	Add 2 to TQ listed.			
0757-0280	Add 157 to TQ listed.			
0757-0284	Add 1 to TQ listed.			
0757-0401	Add 9 to TQ listed.			
0757-0403	Add 392 to TQ listed.			
0757-0416	Add 4 to TQ listed.			
0811-2988	Add 17 to TQ listed.			
1820-0140	Add 5 to TQ listed.			
1820-0141	Add 2 to TQ listed.			
1820-0186	Add 2 to TQ listed.			
1820-0187	Add 2 to TQ listed.			
1820-0205	Add 3 to TQ listed.			
1820-0301	Add 4 to TQ listed.			
1820-0370	Add 2 to TQ listed.			
1820-0371	Add 2 to TQ listed.			
1820-0372	Add 1 to TQ listed.			
1820-0376	Add 1 to TQ listed.			
1820-0424	Add 2 to TQ listed.			
1820-0451	Add 3 to TQ listed.			
1820-0482	Add 33 to TQ listed.			
1820-0485	Add 3 to TQ listed.			
1820-0966	Add 1 to TQ listed.			
1820-0971	Add 8 to TQ listed.			
1854-0215	Add 68 to TQ listed.			
1901-0040	Add 384 to TQ listed.			
3101-1213	Add 1 to TQ listed.			
5080-0059	Add 7 to TQ listed.			
8159-0005	Add 28 to TQ listed.			

Table 3-1. Numerical Listing of Electrical Parts (Continued)

HP PART NO.	DESCRIPTION	MFR CODE	MFR PART NO.	TQ
	For Direct Memory Access Accessory, perform the following:			
	Add the following entries:			
0698-3439	C: Fxd Met Flm 178 ohms 1% 1/8W	28480	0698-3439	1
0757-0407	R: Fxd Met Flm 200 ohms 1% 1/8W	28480	0757-0407	17
1810-0080	R: Network 7X500 ohms 5% 0.15W Each	28480	1810-0080	2
1820-0233	IC: TTL Symup-On 4-Bit Binary Counter	01295	SN74193N	16
1820-0615	IC: TTL 8-Inpt Multiplexer W/Com Enable	04713	FAIR 9312	4
1820-0616	IC: TTL 4-Bit 2-Inpt Multiplexer	28480	1820-0616	8
12895-60001	Direct Memory Access Card	28480	12895-60001	1
	Change the following entries:			
0160-2055	Add 21 to TQ listed.			
0180-0197	Add 10 to TQ listed.			
0698-3443	Add 2 to TQ listed.			
0698-3446	Add 1 to TQ listed.			
0757-0280	Add 7 to TQ listed.			
0757-0416	Add 9 to TQ listed.			
0757-0418	Add 1 to TQ listed.			
0757-1094	Add 2 to TQ listed.			
1820-0140	Add 1 to TQ listed.			
1820-0141	Add 2 to TQ listed.			
1820-0186	Add 3 to TQ listed.			
1820-0205	Add 1 to TQ listed.			
1820-0301	Add 5 to TQ listed.			
1820-0370	Add 7 to TQ listed.			
1820-0371	Add 6 to TQ listed.			
1820-0372	Add 3 to TQ listed.			
1820-0424	Add 1 to TQ listed.			
1820-0451	Add 2 to TQ listed.			
1820-0482	Add 4 to TQ listed.			
1820-0485	Add 10 to TQ listed.			
1820-0512	Add 2 to TQ listed.			
1820-0605	Add 2 to TQ listed.			
1820-0613	Add 1 to TQ listed.			
	For Floating-Point Hardware Accessory, perform the following:			
	Add the following entries:			
1200-0767	Socket, IC, 16 Contact, Dual Line	91506	316AG5D-3R	6
1816-0054	IC: ROM 4 x 256	28480	1816-0054	1
1816-0055	IC: ROM 4 x 256	28480	1816-0055	1
1816-0056	IC: ROM 4 x 256	28480	1816-0056	1
1816-0057	IC: ROM 4 x 256	28480	1816-0057	1
1816-0058	IC: ROM 4 x 256	28480	1816-0058	1
1816-0059	IC: ROM 4 x 256	28480	1816-0059	1

Table 3-1. Numerical Listing of Electrical Parts (Continued)

HP PART NO.	DESCRIPTION	MFR CODE	MFR PART NO.	TQ
	For Controller Panel (Option 001), perform the following:			
	Add the following entries:			
0698-0084	R: Fxd Met Flm 2.15K ohms 1% 1/8W	28480	0698-0084	1
0757-0442	R: Fxd Met Flm 10.0K ohms 1% 1/8W	28480	0757-0442	1
1820-0068	IC: TTL Triple 3-Input Pos Nand Gate	12040	SN7410N	1
1820-0069	IC: TTL Dual 4-Input Pos Nand Gate	01295	SN7420N	1
1820-0256	IC: DTL Quad 2-Input Power Gate	04713	MC858P	2
02100-60017	Controller Panel Card	28480	02100-60017	1
	Delete the following entries:			
0180-0291	C: Fxd Elect 1.0 UF 10% 35 VDCW	56289	150D105X9035A2-DYS	2
0698-7244	R: Fxd Flm 2.15K ohms 1% 1/8W	28480	0698-7244	2
0698-7260	R: Fxd Flm 10K ohms 1% 1/8W	28480	0698-7260	1
0757-0463	R: Fxd Met Flm 82.5K ohms 1% 1/8W	28480	0757-0463	1
1820-0385	IC: TTL HS 2W 3-2-2-3-Input And/Or Exp	01295	SN74H62N	1
1820-0512	IC: TTL Dual D F/F	01295	SN74H74N	1
1820-0617	IC: TTL Quad 2-Input Excl Nor Gate	04713	MC3022P	4
1820-0668	IC: TTL Hex Buffer/Driver W/Open Coll	01295	SN7407N	2
1820-0769	IC: DTL Qaud 2-Input Power Gate	28480	1820-0769	11
1901-0040	Diode: Silicon 30 MA 30 WV	07267	FDG1088	1
3101-0973	Switch: Slide DPDT 0.5A 125V AC/DC	79727	G126-0018	2
02100-60015	Operator Panel Card	28480	02100-60015	1
	Change the following entries:			
0160-2055	Subtract 13 from TQ listed.			
0180-0106	Subtract 15 from TQ listed.			
0180-0197	Add 1 to TQ listed.			
0698-3441	Subtract 1 from TQ listed.			
0698-7229	Subtract 2 from TQ listed.			
0698-7236	Subtract 5 from TQ listed.			
0757-0416	Subtract 2 from TQ listed.			
1810-0030	Subtract 7 from TQ listed.			
1810-0063	Subtract 2 from TQ listed.			
1820-0140	Subtract 1 from TQ listed.			
1820-0141	Subtract 15 from TQ listed.			
1820-0186	Subtract 3 from TQ listed.			
1820-0205	Subtract 13 from TQ listed.			
1820-0256	Add 2 to TQ listed.			
1820-0301	Subtract 9 from TQ listed.			
1820-0370	Subtract 3 from TQ listed.			
1820-0371	Subtract 4 from TQ listed.			
1820-0372	Subtract 2 from TQ listed.			
1820-0375	Subtract 5 from TQ listed.			
1820-0377	Subtract 1 from TQ listed.			
1820-0424	Subtract 3 from TQ listed.			
1820-0437	Subtract 4 from TQ listed.			
1820-0449	Subtract 1 from TQ listed.			
1820-0451	Subtract 4 from TQ listed.			
1820-0485	Subtract 2 from TQ listed.			

Table 3-1. Numerical Listing of Electrical Parts (Continued)

HP PART NO.	DESCRIPTION	MFR CODE	MFR PART NO.	TQ
	For Controller Panel (Option 001), perform the following (Contd):			
	Change the following entries (Contd):			
1854-0477	Subtract 2 from TQ listed.			
2140-0364	Subtract 33 from TQ listed.			
3101-1531	Subtract 33 from TQ listed.			
8159-0005	Add 2 to TQ listed.			
	For 230-Volt Option 015, perform the following:			
	Add the following entries:			
1251-2207	Connector, Plug, AC 3 pin	00000	OBD	1
2110-0001	Fuse, 1A, 250V	75915	312001	1
2110-0451	Fuse, 6A, 250V	75915	314006	1
	Delete the following entries:			
1251-0313	Connector, Plug, AC, 3 pin	00000	OBD	1
2110-0002	Fuse, 2A, 250V	75915	312002	1
2110-0249	Fuse, 12A, 250V	75915	314012	1

Table 3-2. Numerical Listing of Mechanical Parts

HP PART NO.	DESCRIPTION	MFR CODE	MFR PART NO.	TQ
0100-0432	Washer, Reducing, 3/4 in. ID, 1-5/8 in. OD	74201	1365	2
0100-0433	Nut, Lock, Conduit	22421	141	1
0100-0434	Collar, Cable, Tension	49367	DB-10	1
0360-0015	Strip, Terminal	76530	332-14-03-011	1
0360-0024	Terminal, Lug, 1-5/8 in. long	00000	OBD	1
0360-0033	Spacer, Sleeve, 3/32 in. ID, 1/2 in. long	00000	OBD	2
0360-0279	Insulator, Standoff	17117	2304-54-1	2
0360-0294	Terminal, Solder point	28480	0360-0294	42
0360-1317	Block Terminal	76530	354-11-10-001	1
0362-0143	Terminal, Lug, No. 8	00000	OBD	3
0520-0089	Screw, Machine, flh, No. 2-56, 3/8 in.	00000	OBD	2
0570-1029	Stud, threaded, 1/4 in. long	00000	OBD	4
0590-0053	Nut, Sheet Spring No. 6-32	78553	C17859-632-24D	8
1251-0013	Fastener, Spring Tension, trim	78947	152239	4
1390-0224	Lock and Key	81741	4188	1
1400-0090	Gasket, Neoprene, 5/8 in. OD	00000	OBD	2
1400-0126	Clamp, Cable	09922	HP-4N	6
1400-0189	Clamp, Capacitor	24446	128A2244G21	1
2190-0003	Washer, Lock, split, No. 4	00000	OBD	5
2190-0006	Washer, Lock, split, No. 6	00000	OBD	6
2190-0016	Washer, Lock, int-tooth, 3/8 in. ID	00000	OBD	3
2190-0048	Washer, Lock, Countersunk, No. 8	00000	OBD	37
2190-0068	Washer, Lock, int-tooth, 1/2 in. ID	00000	OBD	2
2190-0073	Washer, Lock, split, No. 8	00000	OBD	4
2190-0076	Washer, Lock, split, No. 8	00000	OBD	14
2190-0108	Washer, Lock, split, No. 4	00000	OBD	8
2190-0196	Washer, Nonmetallic, No. 6	00000	OBD	16
2190-0851	Washer, Lock, split, No. 6	00000	OBD	58
2200-0139	Screw, Machine, ph, No. 4-40, 1/4 in.	00000	OBD	2
2200-0143	Screw, Machine, ph, No. 4-40, 3/8 in.	00000	OBD	8
2200-0151	Screw, Machine, ph, No. 4-40, 3/4 in.	00000	OBD	2
2260-0002	Nut, Plain, Hexagon, No. 4-40	00000	OBD	4
2360-0192	Screw, Machine, ph, No. 6-32, 1/4 in.	00000	OBD	6
2360-0193	Screw, Machine, ph, No. 6-32, 1/4 in.	00000	OBD	4
2360-0196	Screw, Machine, flh, No. 6-32, 3/8 in.	00000	OBD	5
2360-0197	Screw, Machine, ph, No. 6-32, 3/8 in.	00000	OBD	48
2360-0200	Screw, Machine, flh, No. 6-32, 1/2 in.	00000	OBD	15
2360-0203	Screw, Machine, ph, No. 6-32, 5/8 in.	00000	OBD	2
2360-0205	Screw, Machine, ph, No. 6-32, 3/4 in.	00000	OBD	6
2420-0001	Nut, Assembled Washer, No. 6-32	00000	OBD	3
2420-0002	Nut, Plain, Hexagon, No. 6-32	00000	OBD	9
2510-0103	Screw, Machine, ph, No. 8-32, 3/8 in.	00000	OBD	4
2510-0107	Screw, Machine, ph, No. 8-32, 1/2 in.	00000	OBD	10
2510-0123	Screw, Machine, flh, No. 8-32, 1/2 in.	00000	OBD	30
2580-0004	Nut, Plain, Hexagon, No. 8-32	00000	OBD	3
2950-0001	Nut, Plain, Hexagon, 3/8-32	00000	OBD	2
2950-0038	Nut, Plain, Hexagon, 1/2-24	00000	OBD	2
3030-0034	Screw, Cap, Socket Head, No. 10-24, 1/2 in.	00000	OBD	4
3030-0243	Setscrew, Socket Head, No. 6-32, 5/16 in.	00000	OBD	2
3050-0010	Washer, Flat, No. 6	00000	OBD	2
3050-0139	Washer, Flat, No. 8	00000	OBD	8
3050-0227	Washer, Lock, split, No. 6	00000	OBD	11
3050-0228	Washer, Flat, No. 6	00000	OBD	14
3050-0229	Washer, Flat, No. 4	00000	OBD	8
4320-0002	Grommet, Rubber, 8 in. long	28480	4320-0002	1

Table 3-2. Numerical Listing of Mechanical Parts (Continued)

HP PART NO.	DESCRIPTION	MFR CODE	MFR PART NO.	TQ
5000-2595	Spacer, Plate	28480	5000-2595	2
5000-8015	Guard, Fan	28480	5000-8015	2
5020-1922	Spacer, Sleeve, Nylon, int-thread, No.4, 1/4 in. OD, 1/2 in. long	28480	5020-1922	4
5040-6005	Guide, Printed-Circuit Card	28480	5040-6005	57
5060-0222	Handle Assembly	28480	5060-0222	2
5060-0767	Foot, Rubber	28480	5060-0767	5
5060-8716	Cover, Access, bottom	28480	5060-8716	1
8120-1851	Cable, 10 feet long	28480	8120-1851	1
02100-00003	Bracket, Mounting	28480	02100-00003	1
02100-00004	Bracket, Angle	28480	02100-00004	1
02100-00005	Bracket, Angle, Left	28480	02100-00005	1
02100-00006	Bracket, Angle, Right	28480	02100-00006	1
02100-00007	Plate, Mounting	28480	02100-00007	2
02100-00009	Plate, Rear Mounting	28480	02100-00009	1
02100-00010	Bracket, Angle	28480	02100-00010	1
02100-00015	Retainer, Printed-Circuit Card	28480	02100-00015	1
02100-00018	Front Panel	28480	02100-00018	1
02100-00021	Filter, Rear	28480	02100-00021	1
02100-00025	Switch Panel	28480	02100-00025	1
02100-00026	Bracket, Mounting	28480	02100-00026	1
02100-00029	Molding, metal (adhesive back)	28480	02100-00029	2
02100-00039	Screen, front panel	28480	02100-00039	2
02100-00041	Cover, Access, side	28480	02100-00041	2
02100-00044	Panel, Switch	28480	02100-00044	1
02100-00049	Cover, bottom	28480	02100-00049	1
02100-00051	Bracket, Mounting Lock	28480	02100-00051	1
02100-00085	Bracket, double angle	28480	02100-00085	1
02100-00086	Cover, top	28480	02100-00086	1
02100-00110	Cover, Access, top	28480	02100-00110	1
02100-00124	Cover, Access, bottom	28480	02100-00124	1
02100-00138	Bracket, Protect	28480	02100-00138	1
02100-00144	Plate, Mounting	28480	02100-00144	1
02100-00166	Bracket, Mounting, power supply	28480	02100-00166	1
02100-00168	Plate, Mounting	28480	02100-00168	1
02100-20001	Bracket, Connector	28480	02100-20001	2
02100-20002	Support, Printed-Circuit Card Guide	28480	02100-20002	2
02100-20003	Support, Printed-Circuit Card Guide	28480	02100-20003	4
02100-20004	Bar, Rear Support	28480	02100-20004	2
02100-20009	Bar, front panel support	28480	02100-20009	1
02100-20012	Bar, Mounting, bezel	28480	02100-20012	4
02100-20014	Bezel, front	28480	02100-20014	1
02100-20015	Frame, right side	28480	02100-20015	2
02100-20021	Spacer, Sleeve, Nylon, int-thread, 1/4 in. OD, 1-11/32 in. long	28480	02100-20021	5
02100-20053	Cam	28480	02100-20053	1
02100-20054	Spacer, Sleeve, Nylon, int-thread, 1/4 in. OD, 1-11/32 in. long	28480	02100-20054	1
02116-0033	Clip, Retaining, thermal switch	28480	02116-0033	1
	For Controller Panel (option 001) change the above list as follows:			
	Add:			
02100-00129	Bracket, Mounting	28480	02100-00129	1
02100-00130	Switch Panel	28480	02100-00130	1
	Delete:			
02100-00025	Switch Panel	28480	02100-00025	1
02100-00026	Bracket, Mounting	28480	02100-00026	1
02100-20054	Spacer, Sleeve, Nylon, int-thread, 1/4 in. OD, 1-11/32 in. long	28480	02100-20054	1
	Change:			
3050-0228	Add 3 to TQ listed.			
02100-20021	Add 1 to TQ listed.			
	For Floating-Point Hardware Accessory add to the above list as follows:			
0340-0788	Insulator, IC Socket	91506	316-6PI	6

Table 3-3. Reference Designations and Abbreviations

REFERENCE DESIGNATIONS

A	= assembly	K	= relay	TB	= terminal board
B	= motor, synchro	L	= inductor	TP	= test point
BT	= battery	M	= meter	U	= integrated circuit, non-repairable assembly
C	= capacitor	MC	= microcircuit	V	= vacuum tube, photocell, etc.
CB	= circuit breaker	P	= plug connector	VR	= voltage regulator
CR	= diode	Q	= semiconductor device other than diode or microcircuit	W	= cable, jumper
DL	= delay line	R	= resistor	X	= socket
DS	= indicator	RT	= thermistor	Y	= crystal
E	= Misc electrical parts	S	= switch	Z	= tuned cavity, network
F	= fuse	T	= transformer		
FL	= filter				
J	= receptacle connector				

ABBREVIATIONS

A	= amperes	gra	= gray	ph	= Phillips head
ac	= alternating current	grn	= green	pk	= peak
ad	= anode			p-p	= peak-to-peak
Al	= aluminum	H	= henries	pt	= point
AR	= as required	Hg	= mercury	PIV	= peak inverse voltage
adj	= adjust	hr	= hour(s)	PNP	= positive-negative-positive
assy	= assembly	Hz	= hertz	PWV	= peak working voltage
		hdw	= hardware	porc	= porcelain
B	= base	hex	= hexagon, hexagonal	posn	= position(s)
bp	= bandpass			pozi	= pozidrive
blk	= black	IC	= integrated circuit		
blu	= blue	ID	= inside diameter		
brn	= brown	in.	= inch, inches	rf	= radio frequency
brs	= brass	I/O	= input/output	rdh	= round head
Btu	= British thermal unit	int	= internal	rmo	= rack mount only
Be Cu	= beryllium copper	incl	= include(s)	rms	= root-mean-square
		insul	= insulation, insulated	RWV	= reverse working voltage
C	= collector	impgrg	= impregnated	rect	= rectifier
cw	= clockwise	incand	= incandescent	r/min	= revolutions per minute
ccw	= counterclockwise			RTL	= resistor-transistor logic
cer	= ceramic	k	= kilo (10^3), kilohm		
cmo	= cabinet mount only			s	= second
com	= common	lp	= low pass	SB	= slow blow
crt	= cathode-ray tube			Se	= selenium
CTL	= complementary-transistor logic	m	= milli (10^{-3})	Si	= silicon
		M	= mega (10^6), megohm	scr	= silicon controlled rectifier
cath	= cathode	My	= Mylar	sil	= silver
cd pl	= cadmium plate	mfr	= manufacturer	sst	= stainless steel
Comp	= composition	mom	= momentary	stl	= steel
conn	= connector	mtg	= mounting	spcl	= special
compl	= complete	misc	= miscellaneous	spdt	= single-pole, double throw
		Met Ox	= metal oxide	spst	= single-pole, single-throw
dc	= direct current	mintr	= miniature	semicond	= semiconductor
dia	= diameter				
DTL	= diode-transistor logic	n	= nano (10^{-9})	Ta	= tantalum
depc	= deposited carbon	n.c.	= normally closed or no connection	td	= time delay
dpdt	= double-pole, double-throw			Ti	= titanium
dpst	= double-pole, single-throw	Ne	= neon	tgl	= toggle
		no.	= number	thd	= thread
E	= emitter	n.o.	= normally open	tol	= tolerance
ECL	= emitter-coupled logic	np.	= nickel plated	TTL	= transistor transistor logic
ext	= external	NPN	= negative-positive-negative		
encap	= encapsulated	NPO	= negative-positive zero (zero temperature coefficient)		
elctlt	= electrolytic			U(μ)	= micro (10^{-6})
		NSR	= not separately replaceable		
F	= farads	NRFR	= not recommended for field replacement	V	= volt(s)
FF	= flip-flop			var	= variable
flh	= flat head			vio	= violet
Flm	= film	OD	= outside diameter	VDCW	= direct current working volts
Fxd	= fixed	OBD	= order by description		
filh	= fillister head	orn	= orange	W	= watts
		ovh	= oval head	WW	= wirewound
G	= giga (10^9)	oxd	= oxide	wht	= white
Ge	= germanium			WIV	= working inverse voltage
gl	= glass	p	= pico (10^{-12})		
gnd	= ground(ed)	PC	= printed circuit	yel	= yellow

Table 3-4. Code List of Manufacturers

The following code numbers are from the Federal Supply Code for Manufacturers Cataloging Handbooks H4-1 and H4-2, and the latest supplements.

Code No.	Manufacturer	Address
00779	Amp. Inc.	Harrisburg, Pa.
00866	Goe Engineering Co.	City of Industry, Cal.
01121	Allen Bradley Co.	Milwaukee, Wis.
01295	Texas Instruments, Inc., Transistor Products Div.	Dallas, Texas
01961	Pulse Engineering Co.	Santa Clara, Cal.
02735	Radio Corp. of America, Semiconductor and Materials Div.	Somerville, N.J.
04713	Motorola, Inc., Semiconductor Prod. Div.	Phoenix, Arizona
05245	Components Corp.	Chicago, Ill.
05277	Westinghouse Electric Corp., Semi-Conductor Dept.	Youngwood, Pa.
07263	Fairchild Camera & Instr. Corp., Semi-conductor Div.	Mountain View, Cal.
07910	Continental Device Corp.	Hawthorne, Cal.
09922	Burndy Corp.	Norwalk, Conn.
11237	Chicago Telephone of California, Inc.	So. Pasadena, Cal.
12040	National Semiconductor	Danbury, Conn.
14268	Lidco, Inc.	Freeport, N.Y.
14433	ITT Semiconductor, A Div. of Int. Telephone & Telegraph Corp.	West Palm Beach, Fla.
14604	Elmwood Sensors Inc.	Cranston, R.I.
14655	Cornell Dublier Electric Corp.	Newark, N.J.
14659	Sprague Electric Co.	Visalia, Cal.
17117	Electronic Molding Corp.	Pawtucket, R.I.
22421	Tomas and Betts Ltd.	Quebec, Canada
24446	General Electric Co.	Schenectady, N.Y.
24931	Specialty Connector Co.	Indianapolis, Ind.
28480	Hewlett-Packard Co.	Palo Alto, Cal.
49367	Pyle-National Co.	Chicago, Ill.
56289	Sprague Electric Co.	North Adams, Mass.
71279	Cambride Thermionics Corp.	Cambridge, Mass.
71785	Chinch Mfg. Co., Howard B. Jones Div.	Chicago, Ill.
72136	Electro Motive Mfg. Co., Inc.	Willimantic, Conn.
74201	Racon Corp.	New York, N.Y.
75915	Littlefuse, Inc.	Des Plaines, Ill.
76493	J.W. Miller Co.	Los Angeles, Cal.
76530	Chinch-Monadnock, Div. of United Carr Fastener Corp.	San Leandro, Cal.
76854	Oak Manufacturing Co.	Crystal Lake, Ill.
78189	Shakeproof Division of Illinois Tool Works	Elgin, Ill.
78947	Ucinite Co.	Newtonville, Mass.
79727	Continental-Wirt Electronics Corp.	Philadelphia, Pa.
79963	Zierick Mfg. Corp.	New Rochelle, N.Y.
80131	Electronic Industries Association. Any brand part meeting EIA Standards	Washington, D.C.
81640	Controls Co. of America, Control Switch Division	Folcroft, Pa.
81741	Chicago Lock Co.	Chicago, Ill.
82142	Jeffers Electronics, Div. of Speer Carbon Co.	DuBois, Pa.
83330	Smith, Herman H., Inc.	Brooklyn, N.Y.
86684	Radio Corp. of America, Electronic Corp. & Devices Div.	Harrison, N.Y.
91418	Radio Materials Co.	Chicago, Ill.
91506	Augat Inc.	Attleboro, Mass.
93332	Sylvania Electric Prod. Inc., Semi-conductor Div.	Woburn, Mass.
95987	Wechesser Co.	Chicago, Ill.
98291	Sealectro Corp.	Mamaroneck, N.Y.
98410	Etc, Inc.	Cleveland, Ohio
99800	Delevan Electronics Corp.	East Aurora, N.Y.

ELECTRONIC

SALES & SERVICE OFFICES

UNITED STATES

ALABAMA
P.O. Box 4207
2003 Byrd Spring Road S.W.
Huntsville 35802
Tel: (205) 881-4591
TWX: 810-726-2204

ARIZONA
2336 E. Magnolia St.
Phoenix 85034
Tel: (602) 244-1361
TWX: 910-951-1330

5737 East Broadway
Tucson 85711
Tel: (602) 298-2313
TWX: 910-952-1162

CALIFORNIA
1430 East Orangethorpe Ave.
Fullerton 92631
Tel: (714) 870-1000
TWX: 910-592-1288

3939 Lankershim Boulevard
North Hollywood 91604
Tel: (213) 877-1282
TWX: 910-499-2170

6305 Arizona Place
Los Angeles 90045
Tel: (213) 649-2511
TWX: 910-328-6148

1101 Embarcadero Road
Palo Alto 94303
Tel: (415) 327-6500
TWX: 910-373-1280

2220 Watt Ave.
Sacramento 95825
Tel: (916) 482-1463
TWX: 910-367-2092

9606 Aero Drive
P.O. Box 23333
San Diego 92123
Tel: (714) 279-3200
TWX: 910-335-2000

COLORADO
7965 East Prentice
Englewood 80110
Tel: (303) 771-3455
TWX: 910-935-0705

CONNECTICUT
12 Lunar Drive
New Haven 06525
Tel: (203) 389-6551
TWX: 710-465-2029

FLORIDA
P.O. Box 24210
2806 W. Oakland Park Blvd.
Ft. Lauderdale 33307
Tel: (305) 731-2020
TWX: 510-955-4099

P.O. Box 13910
6177 Lake Ellenor Dr.
Orlando, 32809
Tel: (305) 859-2900
TWX: 810-850-0113

GEORGIA
P.O. Box 28234
450 Interstate North
Atlanta 30328
Tel: (404) 436-6181
TWX: 810-766-4890

HAWAII
2875 So. King Street
Honolulu 96814
Tel: (808) 955-4455

ILLINOIS
5500 Howard Street
Skokie 60076
Tel: (312) 677-0400
TWX: 910-223-3613

INDIANA
3839 Meadows Drive
Indianapolis 46205
Tel: (317) 546-4891
TWX: 810-341-3263

LOUISIANA
P. O. Box 840
3239 Williams Boulevard
Kenner 70062
Tel: (504) 721-6201
TWX: 810-955-5524

MARYLAND
6707 Whitestone Road
Baltimore 21207
Tel: (301) 944-5400
TWX: 710-862-9157

P.O. Box 1648
2 Choke Cherry Road
Rockville 20850
Tel: (301) 948-6370
TWX: 710-828-9684

MASSACHUSETTS
32 Hartwell Ave.
Lexington 02173
Tel: (617) 861-8960
TWX: 710-326-6904

MICHIGAN
23855 Research Drive
Farmington 48024
Tel: (313) 476-6400
TWX: 810-242-2900

MINNESOTA
2459 University Avenue
St. Paul 55114
Tel: (612) 645-9461
TWX: 910-563-3734

MISSOURI
11131 Colorado Ave.
Kansas City 64137
Tel: (816) 763-8000
TWX: 910-771-2087

148 Weldon Parkway
Maryland Heights 63043
Tel: (314) 567-1455
TWX: 910-764-0830

***NEVADA**
Las Vegas
Tel: (702) 382-5777

NEW JERSEY
W. 120 Century Road
Paramus 07652
Tel: (201) 265-5000
TWX: 710-990-4951

1060 N. Kings Highway
Cherry Hill 08034
Tel: (609) 667-4000
TWX: 710-892-4945

NEW MEXICO
P.O. Box 8366
Station C
6501 Lomas Boulevard N.E.
Albuquerque 87108
Tel: (505) 265-3713
TWX: 910-989-1665

156 Wyatt Drive
Las Cruces 88001
Tel: (505) 526-2485
TWX: 910-983-0550

NEW YORK
6 Automation Lane
Computer Park
Albany 12205
Tel: (518) 458-1550
TWX: 710-441-8270

1219 Campville Road
Endicott 13760
Tel: (607) 754-0050
TWX: 510-252-0890

New York City
Manhattan, Bronx
Contact Paramus, NJ Office
Tel: (201) 265-5000
Brooklyn, Queens, Richmond
Contact Woodbury, NY Office
Tel: (516) 921-0300

82 Washington Street
Poughkeepsie 12601
Tel: (914) 454-7330
TWX: 510-248-0012

39 Saginaw Drive
Rochester 14623
Tel: (716) 473-9500
TWX: 510-253-5981

5858 East Molloy Road
Syracuse 13211
Tel: (315) 454-2486
TWX: 710-541-0482

1 Crossways Park West
Woodbury 11797
Tel: (516) 921-0300
TWX: 510-221-2168

NORTH CAROLINA
P.O. Box 5188
1923 North Main Street
High Point 27262
Tel: (919) 885-8101
TWX: 510-926-1516

OHIO
25575 Center Ridge Road
Cleveland 44145
Tel: (216) 835-0300
TWX: 810-427-9129

330 Progress Rd.
Dayton 45449
Tel: (513) 859-8202
TWX: 810-459-1925

1120 Morse Road
Columbus 43229
Tel: (614) 846-1300

OKLAHOMA
P.O. Box 32008
Oklahoma City 73132
Tel: (405) 721-0200
TWX: 910-830-6862

OREGON
17890 SW Boones Ferry Road
Tualatin 97062
Tel: (503) 620-3350
TWX: 910-467-8714

PENNSYLVANIA
2500 Moss Side Boulevard
Monroeville 15146
Tel: (412) 271-0724
TWX: 710-797-3650

1021 8th Avenue
King of Prussia Industrial Park
King of Prussia 19406
Tel: (215) 265-7000
TWX: 510-660-2670

RHODE ISLAND
873 Waterman Ave.
East Providence 02914
Tel: (401) 434-5535
TWX: 710-381-7573

***TENNESSEE**
Memphis
Tel: (901) 274-7472

TEXAS
P.O. Box 1270
201 E. Arapaho Rd.
Richardson 75080
Tel: (214) 231-6101
TWX: 910-867-4723

P.O. Box 27409
6300 Westpark Drive
Suite 100
Houston 77027
Tel: (713) 781-6000
TWX: 910-881-2645

231 Billy Mitchell Road
San Antonio 78226
Tel: (512) 434-4171
TWX: 910-871-1170

UTAH
2890 South Main Street
Salt Lake City 84115
Tel: (801) 487-0715
TWX: 910-925-5681

VIRGINIA
P.O. Box 6514
2111 Spencer Road
Richmond 23230
Tel: (803) 285-3431
TWX: 710-956-0157

WASHINGTON
Bellefield Office Pk.
1203 - 114th SE
Bellevue 98004
Tel: (206) 454-3971
TWX: 910-443-2303

***WEST VIRGINIA**
Charleston
Tel: (304) 345-1640

WISCONSIN
9431 W. Beloit Road
Suite 117
Milwaukee 53227
Tel: (414) 541-0550

FOR U.S. AREAS NOT LISTED:
Contact the regional office nearest you: Atlanta, Georgia . . . North Hollywood, California . . . Paramus, New Jersey . . . Skokie, Illinois. Their complete addresses are listed above.
***Service Only**

CANADA

ALBERTA
Hewlett-Packard (Canada) Ltd.
11748 Kingsway Ave.
Edmonton
Tel: (403) 452-3670
TWX: 610-831-2431

BRITISH COLUMBIA
Hewlett-Packard (Canada) Ltd.
4608 Canada Way
North Burnaby 2
Tel: (604) 433-8213
TWX: 610-922-5059

MANITOBA
Hewlett-Packard (Canada) Ltd.
513 Century St.
Winnipeg
Tel: (204) 786-7581
TWX: 610-671-3531

NOVA SCOTIA
Hewlett-Packard (Canada) Ltd.
2745 Dutch Village Rd.
Suite 210
Halifax
Tel: (902) 455-0511
TWX: 610-271-4482

ONTARIO
Hewlett-Packard (Canada) Ltd.
1785 Woodward Dr.
Ottawa 3
Tel: (613) 255-6180, 255-6530
TWX: 610-562-8968

Hewlett-Packard (Canada) Ltd.
50 Galaxy Blvd.
Rexdale
Tel: (416) 677-9611
TWX: 610-492-4246

QUEBEC
Hewlett-Packard (Canada) Ltd.
275 Hymus Boulevard
Pointe Claire
Tel: (514) 697-4232
TWX: 610-422-3022
Telex: 01-20607

FOR CANADIAN AREAS NOT LISTED:
Contact Hewlett-Packard (Canada) Ltd. in Pointe Claire, at the complete address listed above.

CENTRAL AND SOUTH AMERICA

ARGENTINA
Hewlett-Packard Argentina
S.A.C.e.I
Lavalle 1171 - 3°
Buenos Aires
Tel: 35-0436, 35-0627, 35-0341
Telex: 012-1009
Cable: HEWPACK ARG

BOLIVIA
Stambuk & Mark (Bolivia) LTDA.
Av. Mariscal, Santa Cruz 1342
La Paz
Tel: 40626, 53163, 52421
Telex: 3560014
Cable: BUKMAR

BRAZIL
Hewlett-Packard Do Brasil
I.E.C. Ltda.
Rua Frei Caneca 1119
01307-**Sao Paulo**-SP
Tel: 288-7111, 287-5858
Telex: 309151/2/3
Cable: HEWPACK Sao Paulo

Hewlett-Packard Do Brasil
I.E.C. Ltda.
Praca Dom Feliciano, 78
90000-**Porto Alegre**-RS
Rio Grande do Sul (RS) Brasil
Tel: 25-8470
Cable: HEWPACK Porto Alegre

Hewlett-Packard Do Brasil
I.E.C. Ltda.
Rua da Matriz, 29
20000-**Rio de Janeiro**-GB
Tel: 266-2643
Telex: 210079 HEWPACK
Cable: HEWPACK Rio de Janeiro

CHILE
Héctor Calcagni y Cia, Ltda.
Casilla 16.475
Santiago
Tel: 423 96
Cable: CALCAGNI Santiago

COLOMBIA
Instrumentación
Henrik A. Langebaek & Kier S.A.
Carrera 7 No. 48-59
Apartado Aéreo 6287
Bogota, 1 D.E.
Tel: 45-78-06, 45-55-46
Cable: AARIS Bogota
Telex: 44400INSTCO

COSTA RICA
Lic. Alfredo Gallegos Gurdián
Apartado 10159
San José
Tel: 21-86-13
Cable: GALGUR San José

ECUADOR
Laboratorios de Radio-Ingenieria
Calle Guayaquil 1246
Post Office Box 3199
Quito
Tel: 212-496; 219-185
Cable: HORVATH Quito

EL SALVADOR
Electronic Associates
Apartado Postal 1682
Centro Comercial Gigante
San Salvador, El Salvador C.A.
Paseo Escalon 4649-4° Piso
Tel: 23-44-60, 23-32-37
Cable: ELECAS

GUATEMALA
IPESA
5a via 2-01, Zona 4
Guatemala City
Tel: 63-6-27 & 64-7-86
Telex: 4192 TELTRO GU

MEXICO
Hewlett-Packard Mexicana,
S.A. de C.V.
Torres Adalid No. 21, 11° Piso
Col. del Valle
Mexico 12, D.F.
Tel: 543-42-32
Telex: 017-74-507

NICARAGUA
Roberto Terán G.
Apartado Postal 689
Edificio Terán
Managua
Tel: 3451, 3452
Cable: ROTERAN Managua

PANAMA
Electrónico Balboa, S.A.
P.O. Box 4929
Ave. Manuel Espinosa No. 13-50
Bldg. Alina
Panama City
Tel: 230833
Telex: 3481103, Curunda,
Canal Zone
Cable: ELECTRON Panama City

PARAGUAY
Z. J. Melamed S.R.L.
Division: Aparatos y Equipos Medicos
Division: Aparatos y Equipos Scientificos y de Investigacion
P.O. Box 676
Chile, 482, Edificio Victoria
Asuncion
Tel: 4-5069, 4-6272
Cable: RAMEL

PERU
Compañia Electro Médica S.A.
Ave. Enrique Canaual 312
San Isidro
Casilla 1030
Lima
Tel: 22-3900
Cable: ELMED Lima

PUERTO RICO
San Juan Electronics, Inc.
P.O. Box 5167
Ponce de Leon 154
Pda. 3-PTA de Tierra
San Juan 00906
Tel: (809) 725-3342, 722-3342
Cable: SATRONICS San Juan
Telex: SATRON 3450 332

URUGUAY
Pablo Ferrando S.A.
Comercial e Industrial
Avenida Italia 2877
Casilla de Correo 370
Montevideo
Tel: 40-3102
Cable: RADIUM Montevideo

VENEZUELA
Hewlett-Packard de Venezuela
C.A.
Apartado 50933
Edificio Segre
Tercera Transversal
Los Ruices Norte
Caracas 107
Tel: 35-00-11
Telex: 21146 HEWPACK
Cable: HEWPACK Caracas

FOR AREAS NOT LISTED,

CONTACT:
Hewlett-Packard
Inter-Americas
3200 Hillview Ave.
Palo Alto, California 94304
Tel: (415) 493-1501
TWX: 910-373-1267
Cable: HEWPACK Palo Alto
Telex: 034-8300, 034-8493

EUROPE

AUSTRIA
Hewlett-Packard Ges.m.b.H
Handelska 52/3
P.O. Box 7
A-1205 **Vienna**
Tel: (0222) 33 66 06 to 09
Cable: HEWPAK Vienna
Telex: 75923 hewpak a

BELGIUM
Hewlett-Packard Benelux
S.A./N.V.
Avenue de Col-Vert, 1,
(Groenkraaglaan)
B-1170 **Brussels**
Tel: (02) 72 22 40
Cable: PALOBEN Brussels
Telex: 23 494 paloben bru

DENMARK
Hewlett-Packard A/S
Datavej 38
DK-3460 **Birkerod**
Tel: (01) 81 66 40
Cable: HEWPACK AS
Telex: 166 40 hp as

Hewlett-Packard A/S
Torvet 9
DK-8600 **Silkeborg**
Tel: (06) 82-71-66
Telex: 166 40 hp as
Cable: HEWPACK AS

FINLAND
Hewlett-Packard Oy
Bulevardi 26
P.O. Box 12185
SF-00120 **Helsinki** 12
Tel: (90) 13730
Cable: HEWPACKOY Helsinki
Telex: 12-15363 hel

FRANCE
Hewlett-Packard France
Quartier de Courtaboeuf
Boite Postale No. 6
F-91401 **Orsay**
Tel: (1) 907 78 25
Cable: HEWPACK Orsay
Telex: 60048

Hewlett-Packard France
4 Quai des Etroits
F-69321 **Lyon Cedex** 1
Tel: (78) 42 63 45
Cable: HEWPACK Lyon
Telex: 31617

Hewlett-Packard France
29 rue de la Gare
F-31700 **Blagnac**
Tel: (61) 85 82 29
Telex: 51957

GERMAN FEDERAL REPUBLIC
Hewlett-Packard GmbH
Vertriebszentrale Frankfurt
Bernerstrasse 117
Postfach 560 140
D-6000 **Frankfurt** 56
Tel: (0611) 50 04-1
Cable: HEWPACKSA Frankfurt
Telex: 41 32 49 fra

Hewlett-Packard GmbH
Vertriebsbüro Böblingen
Herrenbergerstrasse 110
D-7030 **Böblingen**, Württemberg
Tel: (07031) 66 72 87
Cable: HEPAK Böblingen
Telex: 72 65 739 bbn

Hewlett-Packard GmbH
Vertriebsbüro Düsseldorf
Vogelsanger Weg 38
D-4000 **Düsseldorf**
Tel: (0211) 63 80 31/35
Telex: 85/86 533 hpdd d

Hewlett-Packard GmbH
Vertriebsbüro Hamburg
Wendenstr. 23
D-2000 **Hamburg** 1
Tel: (0411) 24 13 93
Cable: HEWPACKSA Hamburg
Telex: 21 63 032 hphh d

Hewlett-Packard GmbH
Vertriebsburo Hannover
Mellendorfer Strasse 3
D-3000 **Hannover** - Kleefeld
Tel: (0311) 55 06 26

Hewlett-Packard GmbH
Vertriebsbüro München
Unterhachinger Strasse 28
ISAR Center
D-8012 **Ottobrunn**
Tel: (0811) 601 30 61/7
Telex: 52 49 85
Cable: HEWPACKSA Müchen

(West Berlin)
Hewlett-Packard GmbH
Vertriebsbüro Berlin
Wilmersdorfer Strasse 113/114
D-1000 **Berlin W.** 12
Tel: (0311) 3137046
Telex: 18 34 05 hpbln d

GREECE
Kostas Karayannis
18, Ermou Street
GR-**Athens** 126
Tel: 3230-303, 3230-305
Cable: RAKAR Athens
Telex: 21 59 62 rkar gr

IRELAND
Hewlett-Packard Ltd.
224 Bath Road
GB-**Slough**, SL1 4 DS, Bucks
Tel: Slough (0753) 33341
Cable: HEWPIE Slough
Telex: 848413

Hewlett-Packard Ltd.
The Graftons
Stamford New Road
Altrincham, Cheshire, England
Tel: (061) 928-8626
Telex: 668068

ITALY
Hewlett-Packard Italiana S.p.A.
Via Amerigo Vespucci 2
I-20124 **Milan**
Tel: (2) 6251 (10 lines)
Cable: HEWPACKIT Milan
Telex: 32046

Hewlett-Packard Italiana S.p.A.
Piazza Marconi, 25
I-00144 **Rome** - Eur
Tel: (6) 5912544/5, 5915947
Cable: HEWPACKIT Rome
Telex: 61514

Hewlett-Packard Italiana S.p.A.
Vicolo Pastori, 3
I-35100 **Padova**
Tel: (49) 66 40 62
Telex: 32046 via Milan

Hewlett-Packard Italiana S.p.A.
Via Colli, 24
I-10129 **Turin**
Tel: (11) 53 82 64
Telex: 32046 via Milan

LUXEMBURG
Hewlett-Packard Benelux
S.A./N.V.
Avenue de Col-Vert, 1,
(Groenkraaglaan)
B-1170 **Brussels**
Tel: (03/02) 72 22 40
Cable: PALOBEN Brussels
Telex: 23 494

NETHERLANDS
Hewlett-Packard Benelux/N.V.
Weerdestein 117
P.O. Box 7825
NL-**Amsterdam**, Z1011
Tel: 020-42 77 77, 44 29 66
Cable: PALOBEN Amsterdam
Telex: 13 216 hepa nl

NORWAY
Hewlett-Packard Norge A/S
Nesveien 13
Box 149
N-1344 **Haslum**
Tel: (02) 53 83 60
Telex: 16621 hpnas n

PORTUGAL
Telectra-Empresa Técnica de
Eléctricos S.a.r.l.
Rua Rodrigo da Fonseca 103
P.O. Box 2531
P-**Lisbon** 1
Tel: (19) 68 60 72
Cable: TELECTRA Lisbon
Telex: 1598

SPAIN
Hewlett-Packard Española, S.A.
Jerez No 8
E-**Madrid** 16
Tel: 458 26 00
Telex: 23515 hpe

Hewlett-Packard Española, S.A.
Milanesado 21-23
E-**Barcelona** 17
Tel: (3) 203 62 00
Telex: 52603 hpbe e

SWEDEN
Hewlett-Packard Sverige AB
Enighetsvägen 1-3
Fack
S-161 20 **Bromma** 20
Tel: (08) 98 12 50
Cable: MEASUREMENTS
Stockholm
Telex: 10721

Hewlett-Packard Sverige AB
Hagakersgatan 9C
S-431 41 **Mölndal**
Tel: (031) 27 68 00/01
Telex: Via Bromma

SWITZERLAND
Hewlett Packard (Schweiz) AG
Zürcherstrasse 20
P.O. Box 64
CH-8952 Schlieren **Zurich**
Tel: (01) 98 18 21/24
Cable: HPAG CH
Telex: 53933 hpag ch

Hewlett-Packard (Schweiz) AG
9, Chemin Louis-Pictet
CH-1214 Vernier—**Geneva**
Tel: (022) 41 4950
Cable: HEWPACKSA Geneva
Telex: 27 333 hpsa ch

TURKEY
Telekom Engineering Bureau
Saglik Sok No. 15/1
Ayaspasa-Beyoglu
P.O. Box 437 Beyoglu
TR-**Istanbul**
Tel: 49 40 40
Cable: TELEMATION Istanbul

UNITED KINGDOM
Hewlett-Packard Ltd.
224 Bath Road
GB-**Slough**, SL1 4 DS, Bucks
Tel: Slough (0753) 33341
Cable: HEWPIE Slough
Telex: 848413

Hewlett-Packard Ltd.
"The Graftons"
Stamford New Road
GB-**Altrincham**, Cheshire
Tel: (061) 928-8626
Telex: 668068

Hewlett-Packard Ltd's registered address for V.A.T. purposes only:
70, Finsbury Pavement
London, EC2A1SX
Registered No: 690597

SOCIALIST COUNTRIES PLEASE CONTACT:
Hewlett-Packard Ges.m.b.H.
Handelskai 52/3
P.O. Box 7
A-1205 **Vienna**
Ph: (0222) 33 66 06 to 09
Cable: HEWPACK Vienna
Telex: 75923 hewpak a

ALL OTHER EUROPEAN COUNTRIES CONTACT:
Hewlett-Packard S.A.
Rue du Bois-du-Lan 7
P.O. Box 85
CH-1217 Meyrin 2 **Geneva**
Switzerland
Tel: (022) 41 54 00
Cable: HEWPACKSA Geneva
Telex: 2 24 86

AFRICA, ASIA, AUSTRALIA

ANGOLA
Telectra-Empresa Tecnica
de Equipamentos Electricos
SARL
Rua de Barbosa, Rodrigues,
42-1°, D1°
P.O. Box 6487
Luanda
Cable: TELECTRA Luanda

AUSTRALIA
Hewlett-Packard Australia
Pty. Ltd.
22-26 Weir Street
Glen Iris, 3146
Victoria
Tel: 20-1371 (6 lines)
Cable: HEWPARD Melbourne
Telex: 31 024

Hewlett-Packard Australia
Pty. Ltd.
31 Bridge Street
Pymble,
New South Wales, 2073
Tel: 449 6566
Telex: 21561
Cable: HEWPARD Sydney

Hewlett-Packard Australia
Pty. Ltd.
97 Churchill Road
Prospect 5082
South Australia
Tel: 44 8151
Cable: HEWPARD Adelaide

Hewlett-Packard Australia
Pty. Ltd.
1st Floor, Suite 12/13
Casablanca Buildings
196 Adelaide Terrace
Perth, W.A. 6000
Tel: 25-6800
Cable: HEWPARD Perth

Hewlett-Packard Australia
Pty. Ltd.
10 Woolley Street
P.O. Box 191
Dickson A.C.T. 2602
Tel: 49-8194
Cable: HEWPARD Canberra ACT

Hewlett-Packard Australia
Pty. Ltd.
2nd Floor, 49 Gregory Terrace
Brisbane, Queensland, 4000
Tel: 29 1544

CEYLON
United Electricals Ltd.
P.O. Box 681
60, Park St.
Colombo 2
Tel: 26696
Cable: HOTPOINT Colombo

CYPRUS
Kypronics
19 Gregorios & Xenopoulos Road
P.O. Box 1152
CY-**Nicosia**
Tel: 45628/29
Cable: KYPRONICS PANDEHIS

ETHIOPIA
African Salespower & Agency
Private Ltd., Co.
P. O. Box 718
58/59 Cunningham St.
Addis Ababa
Tel: 12285
Cable: ASACO Addisababa

HONG KONG
Schmidt & Co. (Hong Kong) Ltd.
P.O. Box 297
1511, Prince's Building
15th Floor
10, Chater Road
Hong Kong
Tel: 240168, 232735
Telex: HX4766 SCHMCO
Cable: SCHMIDTCO Hong Kong

INDIA
Blue Star Ltd.
Kasturi Buildings
Jamshedji Tata Rd.
Bombay 400 020
Tel: 29 50 21
Telex: 3751
Cable: BLUEFROST

Blue Star Ltd.
Sahas
414/2 Vir Savarkar Marg
Prabhadevi
Bombay 400 025
Tel: 45 73 01
Telex: 3751
Cable: BLUESTAR

Blue Star Ltd.
14/40 Civil Lines
Kampur 208 001
Tel: 6 88 82
Cable: BLUESTAR

Blue Star, Ltd.
7 Hare Street
P.O. Box 506
Calcutta 700 001
Tel: 23-0131
Telex: 655
Cable: BLUESTAR

Blue Star Ltd.
Blue Star House,
34 Ring Road
Lajpat Nagar
New Delhi 110 024
Tel: 62 32 76
Telex: 463
Cable: BLUESTAR

Blue Star, Ltd.
Blue Star House
11/11A Magarath Road
Bangalore 560 025
Tel: 51473
Telex: 430
Cable: BLUESTAR

Blue Star, Ltd.
1-1-117/1
Sarojini Devi Road
Secunderabad 500 003
Tel: 7 63 91, 7 73 93
Cable: BLUEFROST
Telex: 459

Blue Star, Ltd.
23/24 Second Line Beach
Madras 600 001
Tel: 2 39 55
Telex: 379
Cable: BLUESTAR

Blue Star, Ltd.
1B Kaiser Bungalow
Dindli Road
Jamshedpur 831 001
Tel: 38 04
Cable: BLUESTAR
Telex: 240

INDONESIA
Bah Bolon Trading Coy. N.V.
Djalah Merdeka 29
Bandung
Tel: 4915; 51560
Cable: ILMU
Telex: 08-809

IRAN
Multicorp International Ltd.
Avenue Soraya 130
P.O. Box 1212
IR-**Teheran**
Tel: 83 10 35-39
Cable: MULTICORP Tehran
Telex: 2893 MCI TN

ISRAEL
Electronics & Engineering
Div. of Motorola Israel Ltd.
17 Aminadav Street
Tel-Aviv
Tel: 36941 (3 lines)
Cable: BASTEL Tel-Aviv
Telex: 33569

JAPAN
Yokogawa-Hewlett-Packard Ltd.
Ohashi Building
1-59-1 Yoyogi
Shibuya-ku, Tokyo
Tel: 03-370-2281/92
Telex: 232-2024YHP
Cable: YHPMARKET TOK 23-724

Yokogawa-Hewlett-Packard Ltd.
Nisei Ibaragi Bldg.
2-2-8 Kasuga
Ibaragi-Shi
Osaka
Tel: (0726) 23-1641
Telex: 5332-385 YHP OSAKA

Yokogawa-Hewlett-Packard Ltd.
Nakamo Building
No. 24 Kamisasazima-cho
Nakamura-ku, Nagoya City
Tel: (052) 571-5171

Yokogawa-Hewlett-Packard Ltd.
Nitto Bldg.
2-4-2 Shinohara-Kita
Kohoku-ku
Yokohama 222
Tel: 045-432-1504
Telex: 382-3204 YHP YOK

Yokogawa-Hewlett-Packard Ltd.
Chuo Bldg.
Rm. 603 3,
2-Chome
IZUMI-CHO,
Mito, 310
Tel: 0292-25-7470

KENYA
Kenya Kinetics
P.O. Box 18311
Nairobi, Kenya
Tel: 57726
Cable: PROTON

KOREA
American Trading Company
Korea,
I.P.O. Box 1103
Dae Kyung Bldg., 8th Floor
107 Sejong-Ro,
Chongro-Ku, **Seoul**
Tel: (4 lines) 73-8924-7
Cable: AMTRACO Seoul

LEBANON
Constantin E. Macridis
P.O. Box 7213
RL-**Beirut**
Tel: 220846
Cable: ELECTRONUCLEAR Beirut

MALAYSIA
MECOMB Malaysia Ltd.
2 Lorong 13/6A
Section 13
Petaling Jaya, **Selangor**
Cable: MECOMB Kuala Lumpur

MOZAMBIQUE
A.N. Goncalves, Lta.
162, Av. D. Luis
P.O. Box 107
Lourenco Marques
Tel: 27091, 27114
Telex: 6-203 Negon Mo
Cable: NEGON

NEW ZEALAND
Hewlett-Packard (N.Z.) Ltd.
94-96 Dixon Street
P.O. Box 9443
Courtenay Place,
Wellington
Tel: 59-559
Telex: 3898
Cable: HEWPACK Wellington

Hewlett-Packard (N.Z.) Ltd.
Pakuranga Professional Centre
267 Pakuranga Highway
Box 51092
Pakuranga
Tel: 569-651
Cable: HEWPACK, Auckland

NIGERIA
TEIL (Masacon Division)
25 Moronu Street, Suru-Lere,
P.O. Box 5707
Lagos
Tel: 34545
Cable: THETEIL Lagos

PAKISTAN
Mushko & Company, Ltd.
Oosman Chambers
Abdullah Haroon Road
Karachi 3
Tel: 511027, 512927
Cable: COOPERATOR Karachi

Mushko & Company, Ltd.
38B, Satellite Town
Rawalpindi
Tel: 41924
Cable: FEMUS Rawalpindi

PHILIPPINES
Electromex, Inc.
6th Floor, Amalgamated
Development Corp. Bldg.
Ayala Avenue, Makati, Rizal
C.C.P.O. Box 1028
Makati, Rizal
Tel: 86-18-87, 87-76-77,
87-86-88, 87-18-45, 88-91-71,
83-81-12, 83-82-12
Cable: ELEMEX Manila

SINGAPORE
Mechanical and Combustion
Engineering Company Ltd.
10/12, Jalan Kilang
Red Hill Industrial Estate
Singapore, 3
Tel: 647151 (7 lines)
Cable: MECOMB Singapore

Hewlett-Packard Far East
Area Office
P.O. Box 87
Alexandra Post Office
Singapore 3
Tel: 633022
Cable: HEWPACK SINGAPORE

SOUTH AFRICA
Hewlett Packard South Africa
(Pty.), Ltd.
P.O. Box 31716
Braamfontein Transvaal
Milnerton
30 De Beer Street
Johannesburg
Tel: 725-2080, 725-2030
Telex: 0226 JH
Cable: HEWPACK Johannesburg

Hewlett Packard South Africa
(Pty.), Ltd.
Breecastle House
Bree Street
Cape Town
Tel: 2-6941/2/3
Cable: HEWPACK Cape Town
Telex: 0006 CT

Hewlett Packard South Africa
(Pty.), Ltd.
641 Ridge Road, Durban
P.O. Box 99
Overport, Natal
Tel: 88-6102
Telex: 567954
Cable: HEWPACK

TAIWAN
Hewlett Packard Taiwan
39 Chung Shiao West Road
Sec. 1
Overseas Insurance
Corp. Bldg. 7th Floor
Taipei
Tel: 389160,1,2, 375121,
Ext. 240-249
Telex: TP824 HEWPACK
Cable: HEWPACK Taipei

THAILAND
UNIMESA Co., Ltd.
Chongkoinee Building
56 Suriwongse Road
Bangkok
Tel: 37956, 31300, 31307,
37540
Cable: UNIMESA Bangkok

UGANDA
Uganda Tele-Electric Co., Ltd.
P.O. Box 4449
Kampala
Tel: 57279
Cable: COMCO Kampala

VIETNAM
Peninsular Trading Inc.
P.O. Box H-3
216 Hien-Vuong
Saigon
Tel: 20-805, 93398
Cable: PENTRA, SAIGON 242

ZAMBIA
R. J. Tilbury (Zambia) Ltd.
P.O. Box 2792
Lusaka
Zambia, Central Africa
Tel: 73793
Cable: ARJAYTEE, Lusaka

MEDITERRANEAN AND MIDDLE EAST COUNTRIES NOT SHOWN PLEASE CONTACT:
Hewlett-Packard
Co-ordination Office for
Mediterranean and Middle
East Operations
Piazza Marconi 25
I-00144 Rome-Eur, Italy
Tel: (6) 59 40 29
Cable: HEWPACKIT Rome
Telex: 61514

OTHER AREAS NOT LISTED, CONTACT:
Hewlett-Packard
Export Trade Company
3200 Hillview Ave.
Palo Alto, California 94304
Tel: (415) 326-7000
(Feb. 71 493-1501)
TWX: 910-373-1267
Cable: HEWPACK Palo Alto
Telex: 034-8300, 034-8493

HEWLETT hp PACKARD

02100-90004

Printed in U.S.A.