REVISIONS					
ZONE	SYM.	DESCRIPTION	BY	DATE	APPROVAL
	50	REL TO PILOT. PCO #3692	RP	5-1-78	SS
	51	REV PER PCO #3697	RP	4-27-78	SS
	52	ADD C22 & 23, ALSO R9,10. CHG VALUE OF C1 & 2. CUT U4 & ADD 2 TRCS. PCO #3236	AW	1-10-79	SS
	53	C22,23 WERE 0.005 uf. ADD C24. TITLE WAS CHGD. PCO #4455	AW	6-6-79	DS

SEE PAGE 2

I.C. BIASING TABLE

I.C. DEVICE	PIN GND	PIN VCC
74LS00, 7402, 74LS02, 74LS04, 7408, 74LS10, 74LS11, 7416, 74LS08, 74LS20, 74LS32, 7438, 74LS51, 74LS74, 74LS293, 74LS54, 74LS164, 74LS107, 8820	7	14
74LS42, 74LS155, 74LS157, 74LS175, 8831	8	16
74LS96	12	5
OSC	7	14

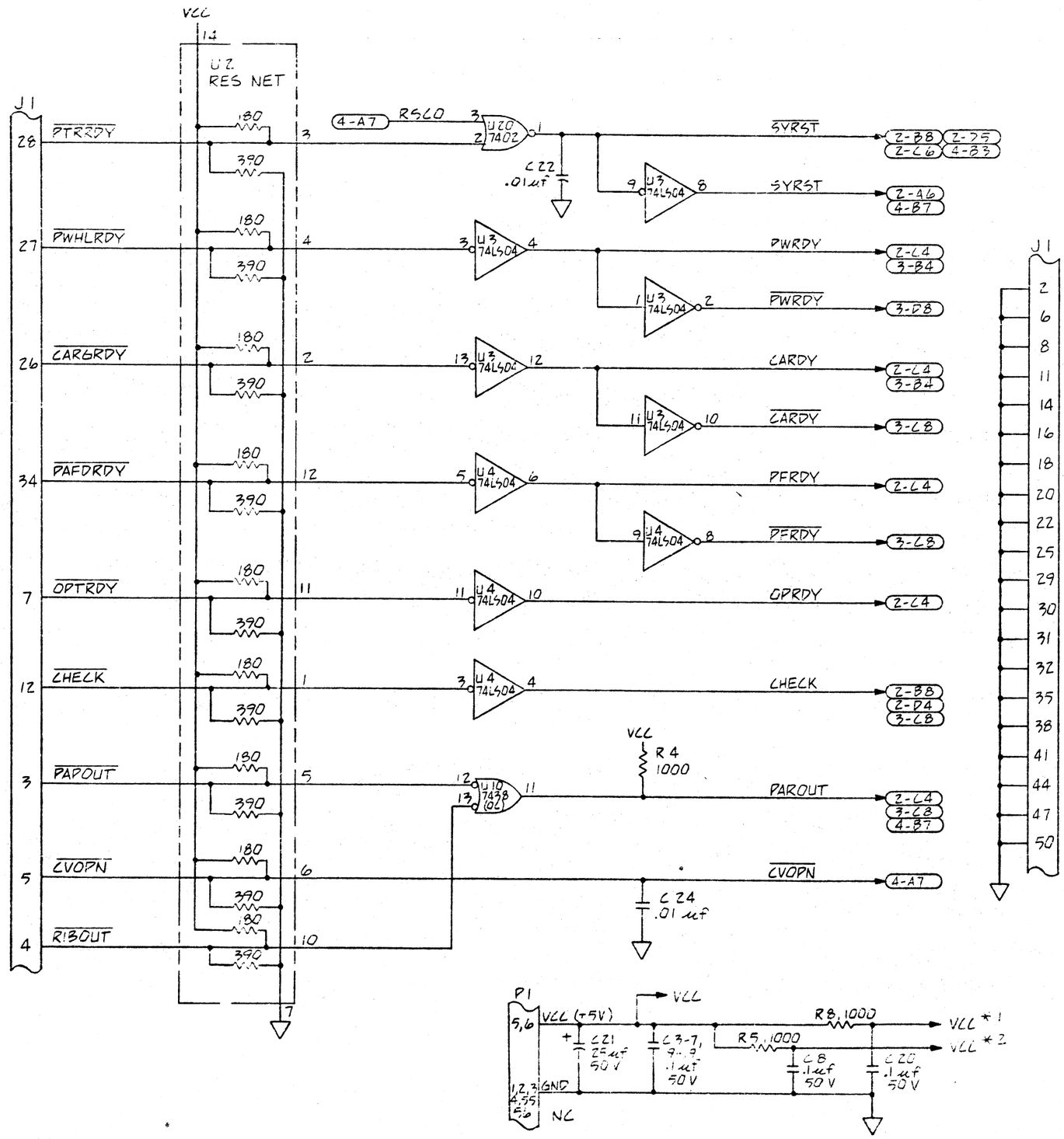

NOTES:

1. ALL RESISTOR VALUES ARE IN OHMS, 1/4 WATT, 5%, UNLESS OTHERWISE NOTED.
2. (X-YZ) SYMBOL INDICATES (X) SHEET NUMBER AND (YZ) LOCATION ON THAT SHEET.
3. THIS SIGNAL INHIBITS CHARACTER STROBE PULSE TO PRINTER WHEN TWO MOST SIGNIFICANT BITS OF DATA WORD ARE BOTH ZERO.
4. THE COMMAND DECODER DECODES BITS 0 AND 12 OF THE DATA WORD, AND GENERATES A SEQUENCE OF SIGNALS TO PERFORM THE FOLLOWING FUNCTIONS:

BIT 0	BIT 12	FUNCTION PERFORMED
0	0	PRINT THE ASCII CHARACTER AND ADVANCE THE CARRIAGE HORIZONTALLY 0.1 INCHES.
0	1	MOVE THE CARRIAGE HORIZONTALLY K/60 INCHES, THEN PRINT THE ASCII CHARACTER.
1	0	MOVE THE CARRIAGE HORIZONTALLY K/60 INCHES, THEN MOVE THE PAPER VERTICALLY L/48 INCHES.
1	1	CONTROL MODE - GENERATES SIGNALS FOR FRONT PANEL LIGHTS, ALARM, PRINTER RIBBON LIFT, SPLIT PLATEN AND LOGIC RESTORE.

5. THIS SIGNAL IS USED TO RESET THE FIRST ZERO BIT FLIP-FLOP WHEN A LOW GOING GLITCH OCCURS ON THE DATA-IN LINE.
6. IF THE PREAMBLE IS 00, THE STATUS FLIP-FLOP IS SET. IF THE PREAMBLE IS 01, THE DATA FLIP-FLOP IS SET.
7. THE SEND STATUS FLIP-FLOP IS SET IN EITHER OF TWO WAYS:
   1) WHEN THE PRINTER "CHECK" STATUS COMES TRUE TO INDICATE A MECHANICAL MALFUNCTION WITHIN THE PRINTER.
   2) WHEN THE SYSTEM READY FLIP-FLOP IS SET BY DEPRESSING THE SYSTEM READY BUTTON ON THE PRINTER FRONT PANEL.

   THE OUTPUT OF THIS FLIP-FLOP IS USED TO GENERATE STATUS BIT 15 (PRINTER START UP) WHEN POWER HAS JUST BEEN TURNED ON, WHEN A PRINTER CHECK HAS OCCURRED, OR WHEN A MANUAL OPERATOR INTERVENTION WAS REQUIRED AFTER A PRINTER MALFUNCTION. THE SEND STATUS FLIP-FLOP IS RESET AFTER COMPLETION OF THE NEXT STATUS OPERATION.
8. THE IGNORE STATUS FLIP-FLOP IS SET BY THE TRAILING EDGE OF $\overline{\text{STATEN}}$ AT THE COMPLETION OF A STATUS OPERATION. THIS FLIP-FLOP PREVENTS ANY MORE STATUS WORDS FROM BEING SENT TO THE COMPUTER UNTIL THE DATA FLIP-FLOP IS SET. PCSO FURTHER PREVENTS SENDING STATUS WORDS UNTIL THE CURRENT DATA OPERATION IS FINISHED.
9. THIS SIGNAL IS USED TO RESET THE FIRST ZERO BIT FLIP-FLOP WHEN THE STATUS FLIP-FLOP GETS SET BY 00 PREAMBLE (POLLING) AND CONDITIONS ARE SUCH THAT THE STATUS WORD CANNOT BE SENT TO THE COMPUTER.
10. THE PRINTER IS STRAPPED FOR SINGLE PLATEN BY CLAMPING THE LEFT PLATEN FLIP-FLOP TO ALLOW RIGHT MOTOR CONTROL. IF A SPLIT PLATEN PRINTER IS USED, CUT THE TRACE BETWEEN E1 AND E2. THIS WILL ALLOW CONTROL OF THE LEFT PLATEN MOTOR USING NORMAL SOFTWARE.

ITEM NO	QTY	PART NUMBER	REF. DES.	DESCRIPTION

REDRAWN

MATERIAL — WEIGHT — FINISH — TREATMENT

UNLESS OTHERWISE SPECIFIED ALL DIMENSIONS INCHES TOLERANCES DECIMAL .XX = ± .XXX = ± FRACTIONAL = ± ANGULAR = ±

SCALE NONE — DRAWN — CHECKED — ENGR — MFG — RELEASED — DATE

FOUR-PHASE SYSTEMS, INC. CUPERTINO, CALIFORNIA

UDT SERIAL INTERFACE

D 90032641-07 B

SHEET 1 OF 5 REV

REVISIONS					
ZONE	SYM.	DESCRIPTION	BY	DATE	APPROVAL
	54	REV CHG ONLY. PCC#4668	GK	[illegible]	[illegible]
	A	REL TO PROD. PCO # 4543	AW	4-7-80	RS
	B	REL TO PROD. PCO #5293	RC	1-30-81	T.T.

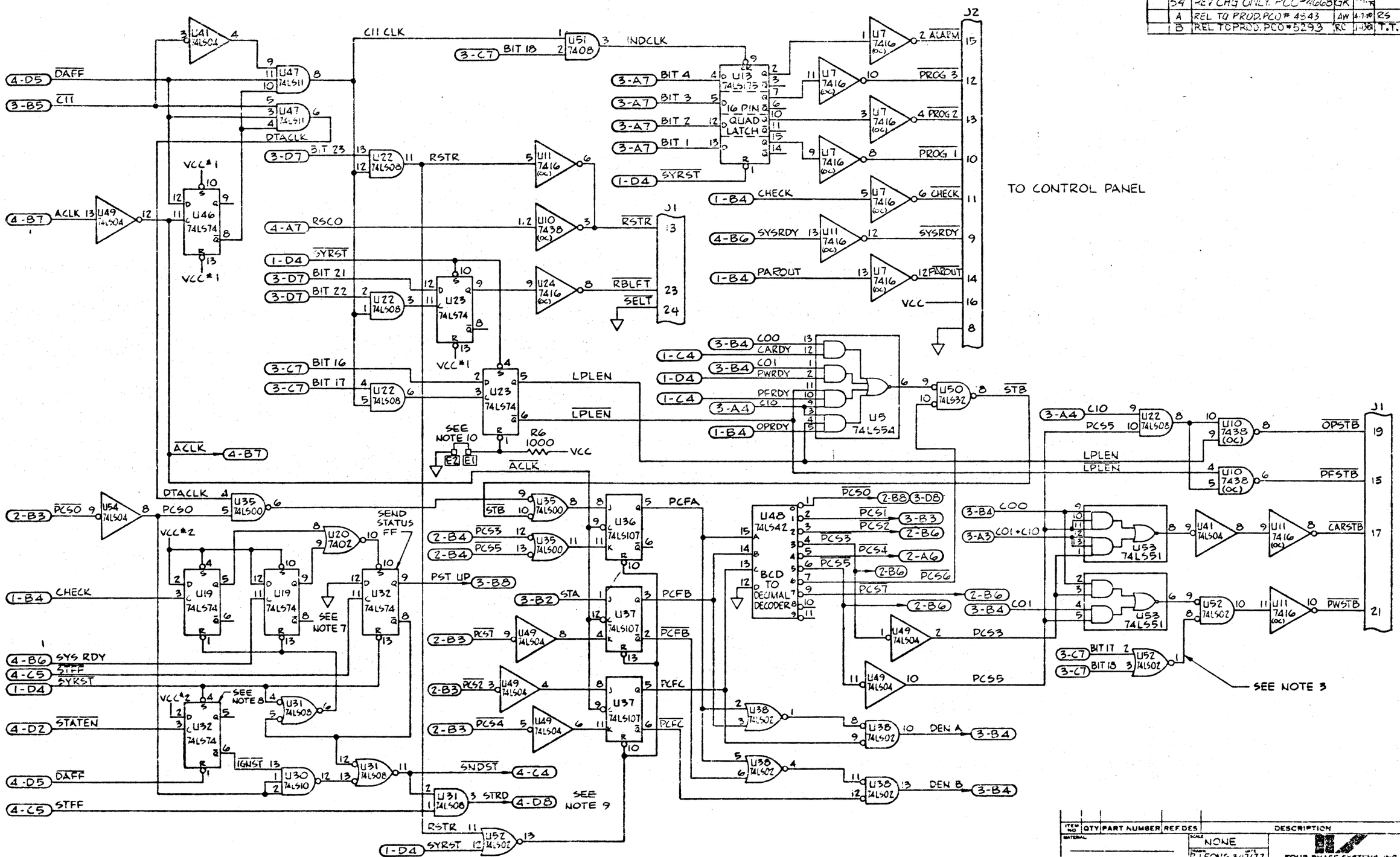

ITEM NO	QTY	PART NUMBER	REF. DES	DESCRIPTION

MATERIAL
WEIGHT
FINISH
TREATMENT
UNLESS OTHERWISE SPECIFIED ALL DIMENSIONS INCHES TOLERANCES
DECIMAL .XX ± .XXX ± FRACTIONAL ± ANGULAR ±

SCALE NONE
DRAWN R. LEONS 3/17/77
CKD J. LYBERG 3-23-77
ENGR
MFG
APPROVED

FOUR-PHASE SYSTEMS, INC.
LOS GATOS, CALIFORNIA

DDT SERIAL INTERFACE

D 90032641-07 B

SHEET 2 OF 5

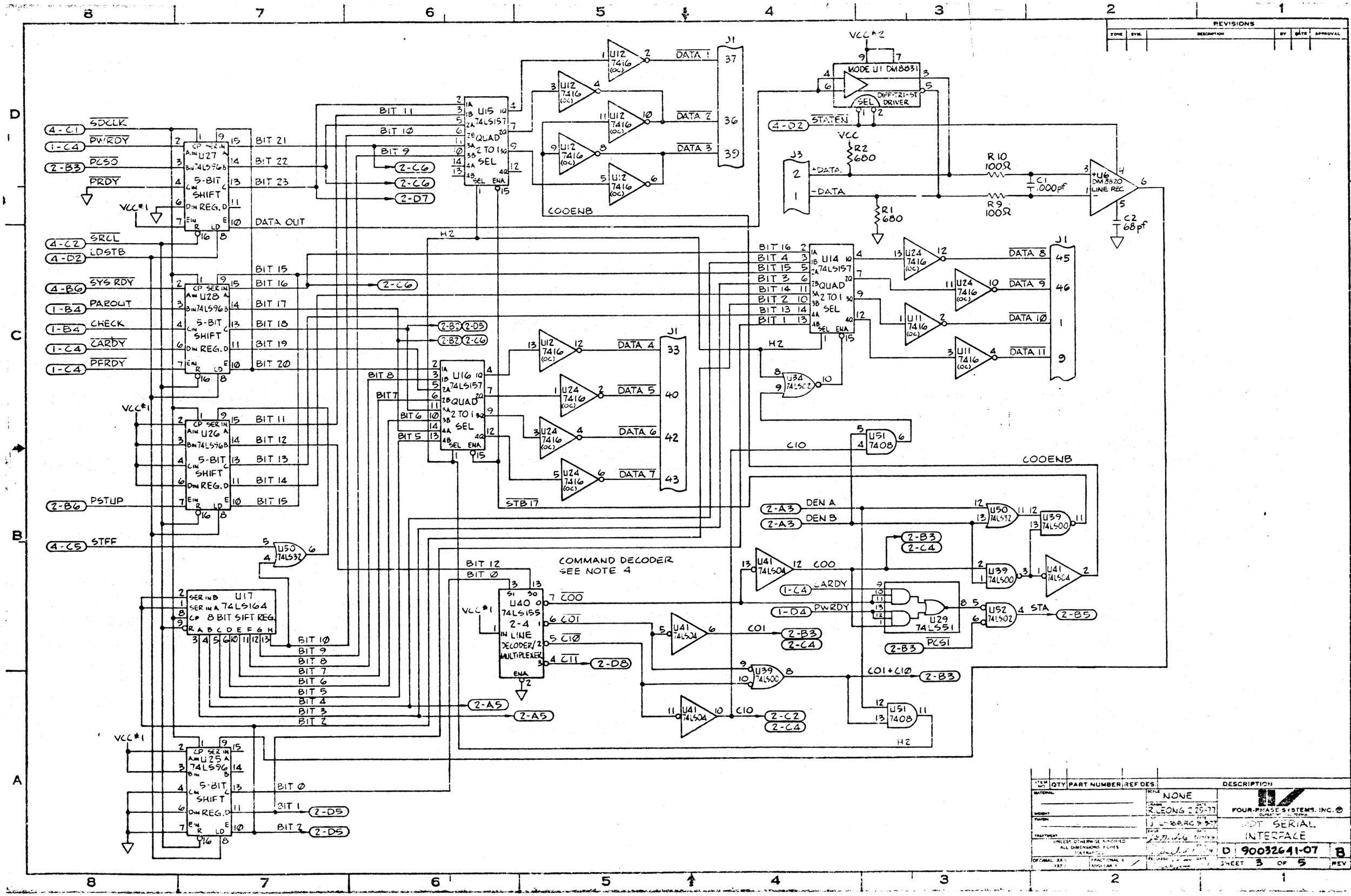
REVISIONS
ZONE
SYM.
DESCRIPTION
BY
DATE
APPROVAL
4-C1 SDCLK
1-C4 PWRDY
2-B3 PCSO
PRDY
VCC*1
4-C2 SRCL
4-D2 LDSTB
4-B6 SYS RDY
1-B4 PAROUT
1-B4 CHECK
1-C4 CARDY
1-C4 PFRDY
2-B6 PSTUP
4-C5 STFF
U27 74LS96 5-BIT SHIFT REG.
U28 74LS96 5-BIT SHIFT REG.
U26 74LS96 5-BIT SHIFT REG.
U25 74LS96 5-BIT SHIFT REG.
U17 74LS164 8 BIT SHIFT REG.
U15 74LS157 QUAD 2 TO 1 SEL
U16 74LS157 QUAD 2 TO 1 SEL
U14 74LS157 QUAD 2 TO 1 SEL
U40 74LS155 2-4 IN LINE DECODER/2 MULTIPLEXER
COMMAND DECODER
SEE NOTE 4
COOENB
DATA 1
DATA 2
DATA 3
DATA 4
DATA 5
DATA 6
DATA 7
DATA 8
DATA 9
DATA 10
DATA 11
STB17
MODE U1 DM8831 DIFF-TRI-ST DRIVER
4-D2 STATEN
J3
+DATA
-DATA
R2 680
R1 680
R10 100Ω
R9 100Ω
C1 1000pf
C2 68pf
U6 DM8820 LINE REC
U34 74LS02
U51 7408
U50 74LS32
U39 74LS00
U41 74LS04
U52 74LS02
U29 74LS51
2-A3 DEN A
2-A3 DEN B
COO
CARDY
PWRDY
STA
2-B5
PCS1
COI
COI+CIO
CIO
2-A5
2-D5
2-D8
2-C2
2-C4
2-B3
H2
BIT 21
BIT 22
BIT 23
DATA OUT
BIT 15
BIT 16
BIT 17
BIT 18
BIT 19
BIT 20
BIT 11
BIT 12
BIT 13
BIT 14
BIT 10
BIT 9
BIT 8
BIT 7
BIT 6
BIT 5
BIT 4
BIT 3
BIT 2
BIT 1
BIT 0
2-C6
2-D7
2-B2
2-D5
ITEM NO. QTY PART NUMBER REF DES DESCRIPTION
MATERIAL
WEIGHT
FINISH
TREATMENT
UNLESS OTHERWISE SPECIFIED ALL DIMENSIONS INCHES
SCALE NONE
DRAWN R. LEONG 2-25-77
FOUR-PHASE SYSTEMS, INC.
UART SERIAL INTERFACE
D 90032641-07 B
SHEET 3 OF 5
REV

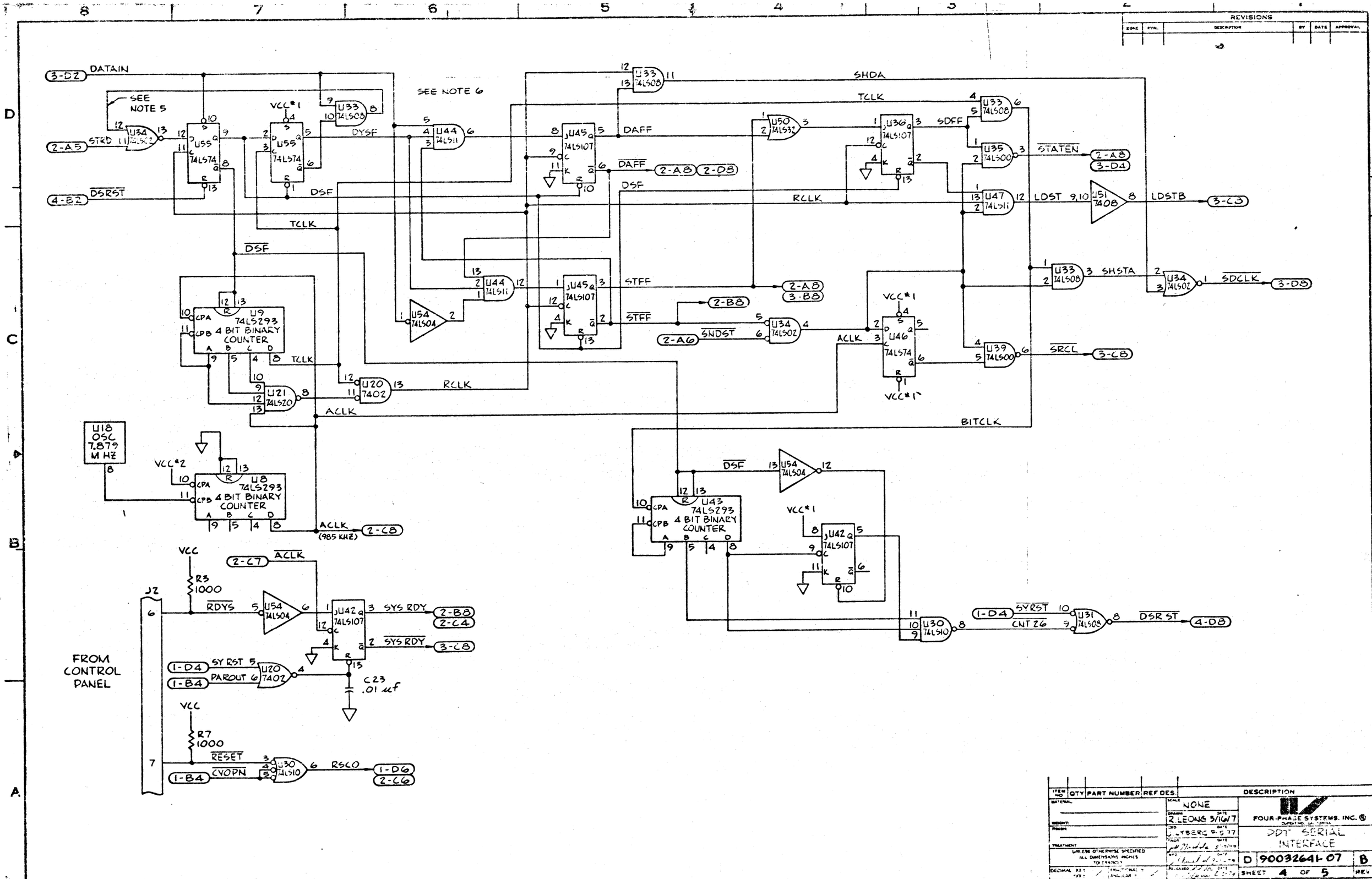
REVISIONS
ZONE
SYM.
DESCRIPTION
BY
DATE
APPROVAL
3-D2
DATAIN
SEE NOTE 5
2-A5
STRD
U34 74LS02
U55 74LS74
VCC*1
U33 74LS08
DYSF
SEE NOTE 6
U44 74LS11
U45 74LS107
DAFF
2-A8
2-D8
4-B2
DSRST
DSF
TCLK
U54 74LS04
U9 74LS293 4 BIT BINARY COUNTER
CPA
CPB
U21 74LS20
U20 7402
RCLK
ACLK
U18 OSC 7.879 MHZ
VCC*2
U8 74LS293 4 BIT BINARY COUNTER
ACLK (985 KHZ)
2-C8
STFF
2-B8
3-B8
2-A6
SNDST
U34 74LS02
SHDA
U36 74LS107
SDFF
U35 74LS00
STATEN
3-D4
U47 74LS11
LDST
U51 7408
LDSTB
3-C3
SHSTA
SDCLK
3-D8
U46 74LS74
U39 74LS00
SRCL
3-C8
BITCLK
U43 74LS293 4 BIT BINARY COUNTER
U42 74LS107
U30 74LS10
1-D4
SYRST
CNT 26
U31 74LS08
DSR ST
4-D8
2-C7
RDYS
SYS RDY
2-B8
2-C4
3-C8
1-D4
SY RST
1-B4
PAROUT
C23 .01 uf
R3 1000
R7 1000
RESET
CVOPN
RSCO
1-D6
2-C6
J2
FROM CONTROL PANEL
ITEM NO
QTY
PART NUMBER
REF DES
DESCRIPTION
MATERIAL
WEIGHT
FINISH
TREATMENT
UNLESS OTHERWISE SPECIFIED ALL DIMENSIONS INCHES TOLERANCES
DECIMAL .XX ±
.XXX ±
FRACTIONAL ±
ANGULAR ±
SCALE NONE
DRAWN R. LEONG 3/16/77
CHD J. LYTBERG 5-5-77
FOUR-PHASE SYSTEMS, INC.
DDT SERIAL INTERFACE
D 90032641-07 B
SHEET 4 OF 5
REV

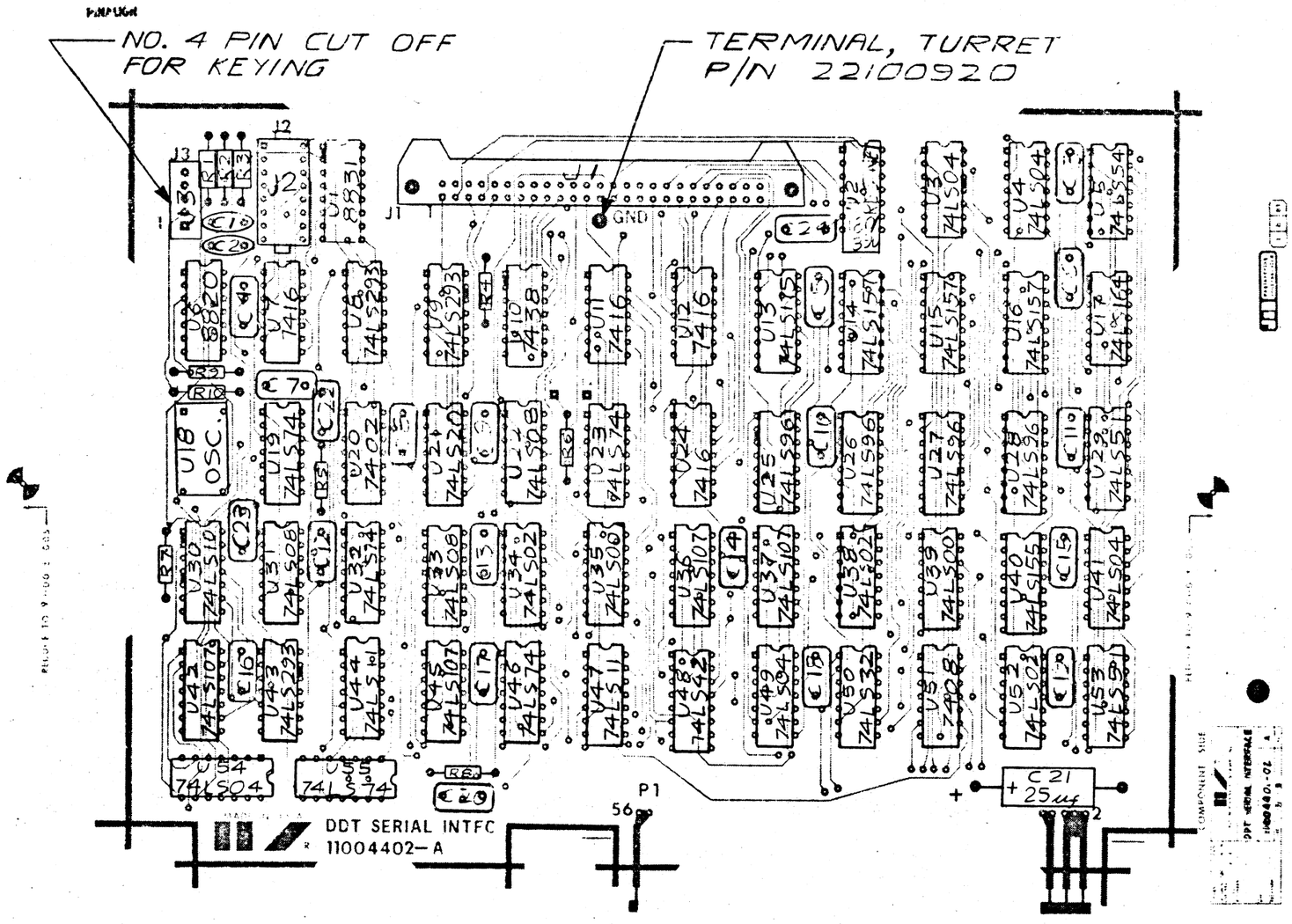

DRAWN R. Vincent DATE 1-13-81	FOUR-PHASE SYSTEMS, INC. CUPERTINO, CALIFORNIA	
CHECKED T. TAYLOR 1-13-81		
ENGINEER	DDT SERIAL INTERFACE	
MFG. C. Roark 4/15/81	90032641-07	B
RELEASED 1-16-81	SHEET 5 OF 5	REV